The following is the Table of Contents for the Internet Bid Package documents:

Internet Table of Contents-1 Page
IFB Notice-2 Pages
Checklist-1 Page
Proposed Form of Contract-2 Pages
Specifications and Bid Proposal – 170 Pages
(Includes Amendments to the July 2006 Standard Specifications pgs 5-115)
DVBE Bidder Information-3 Pages
Small Business Preference-1 Page
Proposal Requirements-1 Page
California Company Preference-1 Page
Bonds-3 Pages
Payee Data Record-2 Pages
Recycle Content Certification-2 Page
Plan Sheets – 7 Pages

The Internet Bid Package contains the 7 Plans for this project.

If this Bid Package <u>is downloaded via the Internet or you are using your own envelope</u>, you will need to submit your signed bid documents in a sealed envelope with the following information on the envelope as provided in the sample below:

YOUR RETURN ADDRESS

Contract No. 04A2664
Bid Due Date: 10/03/06
Bid Due Time: 2:15 PM
Bid Opening: 2:30 PM
Attn: John Medeiros

Department of Transportation MS 67
Division of Procurement and Contracts
1727 30th Street
Sacramento, CA 95816-7006

DEPARTMENT OF TRANSPORTATION
ADMINISTRATIVE SERVICE CENTER
Division of Procurement & Contracts MS-67
1727 30th Street
Sacramento, CA 95816 -7006
PHONE (916) 227-6000
FAX (916) 227-6155
TTY (800) 753-0193 or (916) 227-2857
INTERNET http://caltrans-opac.ca.gov

Flex your power!
Be energy efficient!

INVITATION FOR BID

Contract No. 04A2664
Bid Due Date: 10/03/06

The Department of Transportation has issued the enclosed Invitation for Bid for services described in the enclosed Notice to Bidders.

Please read the entire contract package and all attachments carefully. If you desire to bid, complete the Bid Proposal and return the original in the envelope provided. Your signature affixed to and dated on the bid proposal shall constitute a certification under penalty of perjury, unless exempted, that you have complied with the nondiscrimination program requirements of Government Code Section 12990 and Title 2, California Code of Regulations, Section 8103, and the nondiscrimination program requirements of Title VI of the Civil Rights Act of 1964, 49 CFR Part 21, and 23 CFR Part 200 for Federally funded projects.

Any business used to meet DBE requirements must be certified by the Caltrans Business Enterprise Program; any business used to meet DVBE requirements must be certified by the Department of General Services, Office of Small Business Certification and Resources. Award of this contract will be to the lowest responsible bidder whose proposal complies with all requirements as described in this Invitation for Bid.

Bid Bonds are required at the time of bid opening equal to 10% of the bid amount. If the Contract amount is more than $5,000.00, **Payment** and **Performance Bonds** are required when the contract is awarded. Bids may be rejected if they are not properly completed or show any alteration of the form, additions not called for, conditional bids, incomplete bids, erasures, or irregularities of any kind.

Small Business Preference will be granted in accordance with Section 14835, et seq. of the California Government Code and as contained in Title 2, California Administrative Code, Section 1896, et set., as indicated on Form STD 811 in this Invitation for Bid.

Sealed bids must be received no later than **2:15 PM** on 10/03/06**,** at the following location:

Department of Transportation
Procurement and Contracts MS-67
1727 30th Street
Sacramento, CA 95816-7006

LATE BIDS WILL NOT BE ACCEPTED

BIDS WILL BE OPENED AT 2:30 PM.

If your bid is **HAND DELIVERED**, you must date and time-stamp it immediately upon arrival. The date/time stamp machine is located in the lobby of the first floor to the right of the security guard station at the address noted above. After date/time stamping, bids should be placed in the locked bid cabinet located below the time stamp. If the bid package is too large to be electronically stamped, date/time stamp label provided and attach it to the bid package. When the bid package is too large for the locked bid cabinet, ask the security guard to call the Contracts' reception desk, (916) 227-6000, to have your bid package picked up by Contracts' staff.

NOTIFICATION OF RIGHT TO PROTEST

Bidders have the right to protest the award of Department of Transportation contracts subject to the following grounds, processes and procedures.

1. Grounds for Filing a Protest

   The right to protest the proposed award of a contract is afforded any bidder who claims he/she should have been awarded the contract because he/she was the lowest responsible bidder meeting the specifications.

2. Protest Process

   A protest can be filed only after the issuance of the applicable contract award notices as specified below and prior to actual award:

   a. At least five working days before awarding the contract, the Department will notify the lowest bidder that the contract is to be awarded to another bidder. The notification must be by telegram, fax, overnight courier, or personal delivery.

   b. On written request from any bidder, the Department must post a public "Notice of Intent to Award" the contract.

   c. Information technology (electronic data processing/telecommunications) protests must be filed no later than five (5) working days after the issuance of an intent to award.

3. Filing a Protest

   Submit a detailed written statement of protest, including IFB number, to the Office(s) listed below:

Department of Transportation
Office of Procurement & Contracts
Attention: Protest and Dispute Officer
1727 - 30th Street, MS 67
Sacramento, CA 95816
Phone # 916-227-6096
Fax # 916-227-6155

* * * * * * * * * * *

N O T I C E

* * * * * * * * * * * *

This notice is to bring attention to the following requirements:

Notice will vary according to changes that have occured in our contracts at the time.

Example

Section 3-1.01A DVBE Information

Paragraph 3 of this Section has been revised to read as follows:

The bidder's DVBE information shall include the names of DVBE firms and DVBE joint venture partners to be used, that will participate, with a complete description of work or supplies to be provided by each, the dollar value of each DVBE transaction, **and a written confirmation on company letterhead from the DVBE that it is participating in the contract. A copy of the DVBE's quote will serve as written confirmation that the DVBE is participating in the contract.** When 100 percent of a contract item of work is not to be performed or furnished by a DVBE, a description of the exact portion of that work to be performed or furnished by that DVBE shall be included in the DVBE information, including the planned location of that work. DVBE subcontractors to whom the bidder proposes to directly subcontract portions of the work are to be named in the bid. - See Section 2-1.054, "Required Listing of Proposed Subcontractors," of the Standard Specifications and Section 2-1.01, "General," of these special provisions, regarding listing of proposed subcontractors.

DEPARTMENT OF TRANSPORTATION
ADMINISTRATIVE SERVICE CENTER
Division of Procurement & Contracts MS-67
1727 30th Street
Sacramento, CA 95816-7006
PHONE (916) 227-6000
FAX (916) 227-6155
INTERNET http://caltrans-opac.ca.gov

Flex your power!
Be energy efficient!

GENERAL BIDDERS INSTRUCTIONS/CHECKLIST

Contract No. 04A2664

Items **CHECKED** below must be completed and returned with your bid proposal. Bids omitting this information will be regarded as nonresponsive and rejected.

__X__ Bid Proposal. Complete and sign **Contract Sheets 169 and 170** and return in the enclosed envelope.

__X__ Form DC-OE-MB10, "CALTRANS BIDDER - DVBE - INFORMATION". Please complete and sign the formsincluded in the Invitation for Bid. They **MUST** be returned with the Bid Proposal.

__X__ Bidder's Bond, Form ADM-2010, or Cash, Cashiers Check, or Certified Check made payable to CALTRANS in an amount equal to at least 10% of the amount bid.

__X__ Small Business Preference and Certification Request, Form STD-811
(Use only if claiming small business preference.)

__X__ Proposal Requirements (Form ADM-0378)

__X__ California Company Preference (Form ADM-2052).

The following forms and information will be required at the time of contract award and signature.

__X__ Payment Bond (Form ADM-2009) and Performance Bond (Form ADM-2008).

__X__ Payee Data Record, (Form STD 204).

__X__ Certificate of Insurance, (From your insurance company).

__X__ Form ADM-2038, "RECYCLE CONTENT CERTIFICATION FORM" .

PAYEE DATA RECORD

This form is designed to allow vendors to self-report information needed for accurate and complete reporting of vendor payment income. Completion of this form is required by all vendors providing goods and/or service to the State of California. **CONTRACTS WILL NOT BE EXECUTED WITHOUT THIS DOCUMENT.**

STATE OF CALIFORNIA

STANDARD AGREEMENT

STD 213 (Rev 09/01)

AGREEMENT NUMBER
04A2664

1. This Agreement is entered into between the State Agency and the Contractor named below:

STATE AGENCY'S NAME

Department of Transportation

CONTRACTOR'S NAME

.

2 The term of this Agreement is: 20 Working days

3. The maximum amount of this Agreement is: **$**

The provisions on the reverse side of hereof constitute a part of this agreement.

PROPOSED FORM OF CONTRACT
SAMPLE ONLY – DO NOT COMPLETE

IN WITNESS WHEREOF, this Agreement has been executed by the parties hereto.

CONTRACTOR		***California Department of General Services Use Onlv***
CONTRACTOR'S NAME *(if other than an individual, state whether a corporation, partnership, etc.)*		
BY *(Authorized Signature)*	DATE SIGNED*(Do not type)*	
PRINTED NAME AND TITLE OF PERSON SIGNING		
ADDRESS		
STATE OF CALIFORNIA		
AGENCY NAME DEPARTMENT OF TRANSPORTATION (CALTRANS)		
BY *(Authorized Signature)*	DATE SIGNED*(Do not type)*	Exempt PCC 10107
PRINTED NAME AND TITLE OF PERSON SIGNING John Bennyhoff - Contract Officer		
ADDRESS 1727 30Th Street Sacramento, CA 95816		

STATE OF CALIFORNIA

STANDARD AGREEMENT

STD. 2 (REV. 5-91) (REVERSE)

1. The Contractor agrees to indemnify, defend and save harmless the State, its officers, agents, and employees from any and all claims and losses accruing or resulting to any and all contractors, subcontractors, materialmen, laborers and any other person, firm or corporation furnishing or supplying work services, materials or supplies in connection with the performance of this contract, and from any and all claims and losses accruing or resulting to any person, firm or corporation who may be injured or damaged by the Contractor in the performance of this contract.

2. The Contractor, and the agents and employees of Contractor, in the performance of the agreement, shall act in an independent capacity and not as officers or employees or agents of State of California.

3. The State may terminate this agreement and be relieved of the payment of any consideration to Contractor should Contractor fail to perform the covenants herein contained at the time and in the manner herein provided. In the event of such termination the State may proceed with the work in any manner deemed proper by the State. The cost to the State shall be deducted from any sum due the Contractor under this agreement, and the balance, if any, shall be paid the Contractor upon demand.

4. Without the written consent of the State, this agreement is not assignable by Contractor either in whole or in part.

5. Time is of the essence in this agreement.

6. No alteration or variation of the terms of this contract shall be valid unless made in writing and signed by the parties hereto, and no oral understanding or agreement not incorporated herein, shall be binding on any of the parties hereto.

7. The consideration to be paid Contractor, as provided herein, shall be in compensation for all of Contractor's expenses incurred in the performance hereof, including travel and per diem, unless otherwise expressly so provided.

SON - 116 - 12.6
Co. Route KP

STATE OF CALIFORNIA
DEPARTMENT OF TRANSPORTATION
DISTRICT 4

EA 0F0401

NOTICE TO CONTRACTORS AND SPECIAL PROVISIONS

Sealed proposals will be received by the Department of Transportation, MS-67
Division of Procurement and Contracts
1727-30th St., Sacramento, CA 95816-7006

until 2:15 P.M., October 03, 2006 .

Bids will be publicly opened and read at **2:30 P.M**., for the performance of work as follows:

Install Drainage System in Sonoma County at PM 7.8
(at the intersection of Route 116 and Bohemian Highway)

It is estimated that the work will include approximately the items listed on Page 2.

The foregoing is a general description of the work to be performed and the Department of Transportation does not expressly or by implication agrees that the actual items or amount of work will correspond therewith.

CONTRACTOR'S LICENSE REQUIRED: Class A, C-32 or applicable specialty license will be required at time of bid opening.

Further inquiries concerning the proposed work may be directed to:

Duty Senior Transportation Engineer (Construction),
Department of Transportation, 111 Grand Avenue, Oakland, CA 94612
Telephone : (510) 286-5209.
It is requested that questions be sent by FAX to (510) 622-1805. Please include the contract number and a return fax number.

TO REQUEST BID PACKAGES: PHONE (916) 227-6075/FAX (916) 227-1950
TO REQUEST BID RESULTS: PHONE (916) 227-6000/FAX (916) 227-1950
OR ON THE INTERNET: http://caltrans-opac.ca.gov/contract.htm

Standard Specifications and Standard Plans are available through the State of California,
Department of Transportation, Publications Unit, 1900 Royal Oaks Drive, Sacramento, CA 95815
Telephone No. (916) 445-3520.

THE DEPARTMENT OF TRANSPORTATION RESERVES THE RIGHT TO REJECT ANY AND ALL BIDS.

ITEMS OF WORK

QUANTITY	UNIT	ITEM DESCRIPTION
1	LS	Water Pollution Control
1	LS	Prepare Water Pollution Control Program
1	LS	Temporary Concrete Washout Facility (Portable)
1	LS	Construction Area Sign
1	LS	Traffic Control System
1	EA	Abandon Culvert
2	EA	Remove Inlet
6.2	M	Remove corrugated Metal Pipe
1	LS	Lead Compliance Plan
7	TONNE	Asphalt Concrete
5	M3	Minor Concrete (Minor Structure)
27	M3	Concrete Backfill
54	M	600mm Plastic Pipe
1	LS	Drainage Inlet Markers
1	LS	Install Drainage Inlet Markers
517	KG	Miscellaneous Iron & Steel

The special provisions contained herein have been prepared by or under the direction of the following Registered Persons.

HIGHWAYS

REGISTERED CIVIL ENGINEER

REGISTERED PROFESSIONAL ENGINEER
NGOC TRAN
No. 56977
Exp 6/30/07
CIVIL
STATE OF CALIFORNIA

SPECIAL NOTICE

****

Attention is directed to **SECTION 1, "SPECIFICATIONS AND PLANS,"** of these special provisions for **Amendments To July 1999 Standard Specifications.**

Amendments to the various sections of the Standard Specifications have been consolidated into **SECTION 1** and dated to reflect the most recent revisions.

Standard special provision SECTION 1-0.20 on pages 5 to 115 in this bid package reflects the Amendments to the July 1999 Standard Specifications Book.

SECTION 1-0.20 AMENDMENTS TO JULY 1999 STANDARD SPECIFICATIONS

UPDATED JULY 21, 2006

Amendments to the Standard Specifications set forth in these special provisions shall be considered as part of the Standard Specifications for the purposes set forth in Section 5-1.04, "Coordination and Interpretation of Plans, Standard Specifications and Special Provisions," of the Standard Specifications. Whenever either the term "Standard Specifications is amended" or the term "Standard Specifications are amended" is used in the special provisions, the text or table following the term shall be considered an amendment to the Standard Specifications. In case of conflict between such amendments and the Standard Specifications, the amendments shall take precedence over and be used in lieu of the conflicting portions.

SECTION 1: DEFINITIONS AND TERMS

Issue Date: June 30, 2006

Section 1-1.25, "Laboratory," of the Standard Specifications is amended to read:

1-1.25 LABORATORY

- The Division of Engineering Services - Materials Engineering and Testing Services and Division of Engineering Services - Geotechnical Services of the Department of Transportation, or established laboratories of the various Districts of the Department, or other laboratories authorized by the Department to test materials and work involved in the contract. When a reference is made in the specifications to the "Transportation Laboratory," the reference shall mean Division of Engineering Services - Materials Engineering and Testing Services and Division of Engineering Services - Geotechnical Services, located at 5900 Folsom Boulevard, Sacramento, CA 95819, Telephone (916) 227-7000.

Section 1-1.275, "Office of Structure Design," of the Standard Specifications is amended to read:

1-1.275 OFFICES OF STRUCTURE DESIGN

- The Offices of Structure Design of the Department of Transportation. When the specifications require working drawings to be submitted to the Offices of Structure Design, the drawings shall be submitted to: Offices of Structure Design, Documents Unit, Mail Station 9-4/4I, 1801 30th Street, Sacramento, CA 95816, Telephone (916) 227-8252.

Section 1-1.265, "Manual of Traffic Controls," of the Standard Specifications is amended to read:

1-1.265 MANUAL ON UNIFORM TRAFFIC CONTROL DEVICES

- The Manual on Uniform Traffic Control Devices for Streets and Highways, 2003 Edition (MUTCD) is administered by the Federal Highway Administration.

Section 1, "Definitions and Terms," of the Standard Specifications is amended by adding the following section:

1-1.266 MANUAL ON UNIFORM TRAFFIC CONTROL DEVICES CALIFORNIA SUPPLEMENT

• The MUTCD 2003 California Supplement (MUTCD California Supplement) is issued by the Department of Transportation to provide amendments to the MUTCD. The MUTCD and MUTCD California Supplement supersede the Department's Manual of Traffic Controls.

Section 1-1.39, "State," of the Standard Specifications is amended to read:

1-1.39 STATE

• The State of California, including its agencies, departments, or divisions, whose conduct or action is related to the work.

SECTION 2: PROPOSAL REQUIREMENTS AND CONDITIONS

Issue Date: June 19, 2003

Section 2-1.03, "Examination of Plans, Specifications, Contract, and Site of Work," of the Standard Specifications is amended to read:

2-1.03 Examination of Plans, Specifications, Contract, and Site of Work

• The bidder shall examine carefully the site of the work contemplated, the plans and specifications, and the proposal and contract forms therefor. The submission of a bid shall be conclusive evidence that the bidder has investigated and is satisfied as to the general and local conditions to be encountered, as to the character, quality and scope of work to be performed, the quantities of materials to be furnished and as to the requirements of the proposal, plans, specifications and the contract.

• The submission of a bid shall also be conclusive evidence that the bidder is satisfied as to the character, quality and quantity of surface and subsurface materials or obstacles to be encountered insofar as this information was reasonably ascertainable from an inspection of the site and the records of exploratory work done by the Department as shown in the bid documents, as well as from the plans and specifications made a part of the contract.

• Where the Department has made investigations of site conditions including subsurface conditions in areas where work is to be performed under the contract, or in other areas, some of which may constitute possible local material sources, bidders or contractors may, upon written request, inspect the records of the Department as to those investigations subject to and upon the conditions hereinafter set forth.

• Where there has been prior construction by the Department or other public agencies within the project limits, records of the prior construction that are currently in the possession of the Department and which have been used by, or are known to, the designers and administrators of the project will be made available for inspection by bidders or contractors, upon written request, subject to the conditions hereinafter set forth. The records may include, but are not limited to, as-built drawings, design calculations, foundation and site studies, project reports and other data assembled in connection with the investigation, design, construction and maintenance of the prior projects.

• Inspection of the records of investigations and project records may be made at the office of the district in which the work is situated, or in the case of records of investigations related to structure work, at the Transportation Laboratory in Sacramento, California.

• When a log of test borings or other record of geotechnical data obtained by the Department's investigation of surface and subsurface conditions is included with the contract plans, it is furnished for the bidders' or Contractor's information and its use shall be subject to the conditions and limitations set forth in this Section 2-1.03.

- In some instances, information considered by the Department to be of possible interest to bidders or contractors has been compiled as "Materials Information." The use of the "Materials Information" shall be subject to the conditions and limitations set forth in this Section 2-1.03 and Section 6-2, "Local Materials."
- When cross sections are not included with the plans, but are available, bidders or contractors may inspect the cross sections and obtain copies for their use, at their expense.
- When cross sections are included with the contract plans, it is expressly understood and agreed that the cross sections do not constitute part of the contract, do not necessarily represent actual site conditions or show location, character, dimensions and details of work to be performed, and are included in the plans only for the convenience of bidders and their use is subject to the conditions and limitations set forth in this Section 2-1.03.
- When contour maps were used in the design of the project, the bidders may inspect those maps, and if available, they may obtain copies for their use.
- The availability or use of information described in this Section 2-1.03 is not to be construed in any way as a waiver of the provisions of the first paragraph in this Section 2-1.03 and bidders and contractors are cautioned to make independent investigations and examinations as they deem necessary to be satisfied as to conditions to be encountered in the performance of the work and, with respect to possible local material sources, the quality and quantity of material available from the property and the type and extent of processing that may be required in order to produce material conforming to the requirements of the specifications.
- The Department assumes no responsibility for conclusions or interpretations made by a bidder or contractor based on the information or data made available by the Department. The Department does not assume responsibility for representation made by its officers or agents before the execution of the contract concerning surface or subsurface conditions, unless that representation is expressly stated in the contract.
- No conclusions or interpretations made by a bidder or contractor from the information and data made available by the Department will relieve a bidder or contractor from properly fulfilling the terms of the contract.

SECTION 3: AWARD AND EXECUTION OF CONTRACT

Issue Date: July 21, 2006

Section 3, "Award and Execution of Contract," of the Standard Specifications is amended by adding the following section after Section 3-1.02, "Contract Bonds":

3-1.025 INSURANCE POLICIES

- The successful bidder shall submit:

A. Copy of its commercial general liability policy and its excess policy, including the declarations page, all amendments, riders, endorsements, and other modifications in effect at the time of contract execution. Standard ISO form No. CG 0001 or similar exclusions are allowed if not inconsistent with Section 7-1.12, "Indemnification and Insurance." Allowance of any additional exclusions is at the discretion of the Department.
B. Certificate of Insurance showing all other required coverages. Certificates of Insurance, as evidence of required insurance for the auto liability and any other required policy shall set forth deductible amounts applicable to each policy and all exclusions that are added by endorsement to each policy. The evidence of insurance shall provide that no cancellation, lapse, or reduction of coverage will occur without 10 days prior written notice to the Department.

- If the successful bidder uses any form of self-insurance, it shall submit:

A. A notice of election to self-insure.
B. The coverages for which self-insurance applies.

C. The amount of self-insurance.
D. Declaration under the penalty of perjury by a certified public accountant certifying the accountant has applied Generally Accepted Accounting Principles (GAAP) guidelines and the successful bidder has sufficient funds or other resources to cover the self-insurance amounts.
E. Copy of its commercial general liability policy and its excess policy, including the declarations page, all amendments, riders, endorsements and other modifications in effect at the time of contract execution, for those amounts not covered by self-insurance.

Section 3-1.03, "Execution of Contract," of the Standard Specifications is amended to read:

3-1.03 EXECUTION OF CONTRACT

• The contract shall be signed by the successful bidder and returned, together with the contract bonds and the documents identified in Section 3-1.025, "Insurance Policies," within 10 days, not including Saturdays, Sundays and legal holidays, of receiving the contract for execution.

Section 3-1.04, "Failure to Execute Contract," of the Standard Specifications is amended to read:

3-1.04 FAILURE TO EXECUTE CONTRACT

• Failure of the lowest responsible bidder, the second lowest responsible bidder, or the third lowest responsible bidder to execute the contract as required in Section 3-1.03, " Execution of Contract," within 10 days, not including Saturdays, Sundays, and legal holidays, of receiving the contract for execution shall be just cause for the forfeiture of the proposal guaranty. The successful bidder may file with the Department a written notice, signed by the bidder or the bidder's authorized representative, specifying that the bidder will refuse to execute the contract if it is presented. The filing of this notice shall have the same force and effect as the failure of the bidder to execute the contract and furnish acceptable bonds within the time specified.

SECTION 5: CONTROL OF WORK

Issue Date: December 31, 2001

Section 5-1.02A, "Trench Excavation Safety Plans," of the Standard Specifications is amended to read:

5-1.02A Excavation Safety Plans

• The Construction Safety Orders of the Division of Occupational Safety and Health shall apply to all excavations. For all excavations 1.5 m or more in depth, the Contractor shall submit to the Engineer a detailed plan showing the design and details of the protective systems to be provided for worker protection from the hazard of caving ground during excavation. The detailed plan shall include any tabulated data and any design calculations used in the preparation of the plan. Excavation shall not begin until the detailed plan has been reviewed and approved by the Engineer.

• Detailed plans of protective systems for which the Construction Safety Orders require design by a registered professional engineer shall be prepared and signed by an engineer who is registered as a Civil Engineer in the State of California, and shall include the soil classification, soil properties, soil design calculations that demonstrate adequate stability of the protective system, and any other design calculations used in the preparation of the plan.

• No plan shall allow the use of a protective system less effective than that required by the Construction Safety Orders.

• If the detailed plan includes designs of protective systems developed only from the allowable configurations and slopes, or Appendices, contained in the Construction Safety Orders, the plan shall be submitted at least 5 days before the Contractor intends to begin excavation. If the detailed plan includes

designs of protective systems developed from tabulated data, or designs for which design by a registered professional engineer is required, the plan shall be submitted at least 3 weeks before the Contractor intends to begin excavation.

- Attention is directed to Section 7-1.01E, "Trench Safety."

SECTION 7: LEGAL RELATIONS AND RESPONSIBILITY

Issue Date: July 21, 2006

The eighth paragraph of Section 7-1.09, "Public Safety" of the Standard Specifications is amended to read:

- Signs, lights, flags, and other warning and safety devices and their use shall conform to the requirements set forth in Part 6 of the MUTCD and of the MUTCD California Supplement. Signs or other protective devices furnished and erected by the Contractor, at the Contractor's expense, as above provided, shall not obscure the visibility of, nor conflict in intent, meaning and function of either existing signs, lights and traffic control devices or any construction area signs and traffic control devices for which furnishing of, or payment for, is provided elsewhere in the specifications. Signs furnished and erected by the Contractor, at the Contractor's expense, shall be approved by the Engineer as to size, wording and location.

The fourteenth paragraph of Section 7-1.09, "Public Safety," of the Standard Specifications is amended to read:

- The Contractor shall notify the Engineer not less than 18 days and no more than 90 days prior to the anticipated start of an operation that will change the vertical or horizontal clearance available to public traffic (including shoulders).

The sixteenth paragraph of Section 7-1.09, "Public Safety," of the Standard Specifications is amended to read:

- When vertical clearance is temporarily reduced to 4.72 m or less, low clearance warning signs shall be placed in accordance with Part 2 of the MUTCD and the MUTCD California Supplement, and as directed by the Engineer. Signs shall conform to the dimensions, color, and legend requirements of the MUTCD, the MUTCD California Supplement, and these specifications except that the signs shall have black letters and numbers on an orange retroreflective background. W12-2P signs shall be illuminated so that the signs are clearly visible.

Section 7-1.01A(6), "Workers' Compensation," of the Standard Specifications is amended to read:

7-1.101A(6) (Blank)

Section 7-1.12, "Indemnification and Insurance," of the Standard Specifications is amended to read:

7-1.12 INDEMNIFICATION AND INSURANCE

- The Contractor's obligations regarding indemnification of the State of California and the requirements for insurance shall conform to the provisions in Section 3-1.025, "Insurance Policies," and Sections 7-1.12A, "Indemnification," and 7-1.12B, "Insurance," of this Section 7-1.12.

7-1.12A Indemnification

• The Contractor shall defend, indemnify, and save harmless the State, including its officers, employees, and agents (excluding agents who are design professionals) from any and all claims, demands, causes of action, damages, costs, expenses, actual attorneys' fees, losses or liabilities, in law or in equity (Section 7-1.12A Claims) arising out of or in connection with the Contractor's performance of this contract for:

A. Bodily injury including, but not limited to, bodily injury, sickness or disease, emotional injury or death to persons, including, but not limited to, the public, any employees or agents of the Contractor, the State, or any other contractor; and
B. Damage to property of anyone including loss of use thereof; caused or alleged to be caused in whole or in part by any negligent or otherwise legally actionable act or omission of the Contractor or anyone directly or indirectly employed by the Contractor or anyone for whose acts the Contractor may be liable.

• Except as otherwise provided by law, these requirements apply regardless of the existence or degree of fault of the State. The Contractor is not obligated to indemnify the State for Claims arising from conduct delineated in Civil Code Section 2782 and to Claims arising from any defective or substandard condition of the highway that existed at or before the start of work, unless this condition has been changed by the work or the scope of the work requires the Contractor to maintain existing highway facilities and the Claim arises from the Contractor's failure to maintain. The Contractor's defense and indemnity obligation shall extend to Claims arising after the work is completed and accepted if the Claims are directly related to alleged acts or omissions by the Contractor that occurred during the course of the work. No inspection by the State is a waiver of full compliance with these requirements.

• The Contractor's obligation to defend and indemnify shall not be excused because of the Contractor's inability to evaluate liability or because the Contractor evaluates liability and determine that the Contractor is not liable. The Contractor shall respond within 30 days to the tender of any Claim for defense and indemnity by the State, unless this time has been extended by the State. If the Contractor fails to accept or reject a tender of defense and indemnity within 30 days, in addition to any other remedy authorized by law, the Department may withhold such funds the State reasonably considers necessary for its defense and indemnity until disposition has been made of the Claim or until the Contractor accepts or rejects the tender of defense, whichever occurs first.

• With respect to third-party claims against the Contractor, the Contractor waives all rights of any type to express or implied indemnity against the State, its officers, employees, or agents (excluding agents who are design professionals).

• Nothing in the Contract is intended to establish a standard of care owed to any member of the public or to extend to the public the status of a third-party beneficiary for any of these indemnification specifications.

7-1.12B Insurance

7-1.12B(1) General

• Nothing in the contract is intended to establish a standard of care owed to any member of the public or to extend to the public the status of a third-party beneficiary for any of these insurance specifications.

7-1.12B(2) Casualty Insurance

• The Contractor shall procure and maintain insurance on all of its operations with companies acceptable to the State as follows:

A. The Contractor shall keep all insurance in full force and effect from the beginning of the work through contract acceptance.
B. All insurance shall be with an insurance company with a rating from A.M. Best Financial Strength Rating of A- or better and a Financial Size Category of VII or better.

C. The Contractor shall maintain completed operations coverage with a carrier acceptable to the State through the expiration of the patent deficiency in construction statute of repose set forth in Code of Civil Procedure Section 337.1.

7-1.12B(3) Workers' Compensation and Employer's Liability Insurance

• In accordance with Labor Code Section 1860, the Contractor shall secure the payment of worker's compensation in accordance with Labor Code Section 3700.

• In accordance with Labor Code Section 1861, the Contractor shall submit to the Department the following certification before performing the work:

> I am aware of the provisions of Section 3700 of the Labor Code which require every employer to be insured against liability for workers' compensation or to undertake self-insurance in accordance with the provisions of that code, and I will comply with such provisions before commencing the performance of the work of this contract.

• Contract execution constitutes certification submittal.
• The Contractor shall provide Employer's Liability Insurance in amounts not less than:

A. $1 000 000 for each accident for bodily injury by accident.
B. $1 000 000 policy limit for bodily injury by disease.
C. $1 000 000 for each employee for bodily injury by disease.

• If there is an exposure of injury to the Contractor's employees under the U.S. Longshoremen's and Harbor Workers' Compensation Act, the Jones Act, or under laws, regulations, or statutes applicable to maritime employees, coverage shall be included for such injuries or claims.

7-1.12B(4) Liability Insurance

7-1.12B(4)(a) General

• The Contractor shall carry General Liability and Umbrella or Excess Liability Insurance covering all operations by or on behalf of the Contractor providing insurance for bodily injury liability and property damage liability for the following limits and including coverage for:

A. Premises, operations, and mobile equipment.
B. Products and completed operations.
C. Broad form property damage (including completed operations).
D. Explosion, collapse, and underground hazards.
E. Personal injury.
F. Contractual liability.

• The Contractor shall ensure that all of its subcontractors carry sufficient insurance coverage that the Contractor deems adequate based on the size, duration, and hazards of the subcontracted work.

7-1.12B(4)(b) Liability Limits/Additional Insureds

• The limits of liability shall be at least the amounts shown in the following table:

Total Bid	For Each Occurrence[1]	Aggregate for Products/Completed Operation	General Aggregate[2]	Umbrella or Excess Liability[3]
≤$25 000 000	$1 000 000	$2 000 000	$2 000 000	$5 000 000
>$25 000 000	$1 000 000	$2 000 000	$2 000 000	$15 000 000

1. Combined single limit for bodily injury and property damage.
2. This limit shall apply separately to the Contractor's work under this contract.
3. The umbrella or excess policy shall contain a clause stating that it takes effect (drops down) in the event the primary limits are impaired or exhausted.

• The State, including its officers, directors, agents (excluding agents who are design professionals), and employees, shall be named as additional insureds under the General Liability and Umbrella Liability Policies with respect to liability arising out of or connected with work or operations performed by or on behalf of the Contractor under this contract. Coverage for such additional insureds does not extend to liability:

A. Arising from any defective or substandard condition of the roadway which existed at or before the time the Contractor started work, unless such condition has been changed by the work or the scope of the work requires the Contractor to maintain existing roadway facilities and the claim arises from the Contractor's failure to maintain;
B. For claims occurring after the work is completed and accepted unless these claims are directly related to alleged acts or omissions of the Contractor that occurred during the course of the work; or
C. To the extent prohibited by Insurance Code Section 11580.04.

• Additional insured coverage shall be provided by a policy provision or by an endorsement providing coverage at least as broad as Additional Insured (Form B) endorsement form CG 2010, as published by the Insurance Services Office (ISO), or other form designated by the Department.

7-1.12B(4)(c) Contractor's Insurance Policy is Primary

• The policy shall stipulate that the insurance afforded the additional insureds applies as primary insurance. Any other insurance or self-insurance maintained by the State is excess only and shall not be called upon to contribute with this insurance.

7-1.12B(5) Automobile Liability Insurance

• The Contractor shall carry automobile liability insurance, including coverage for all owned, hired, and nonowned automobiles. The primary limits of liability shall be not less than $1 000 000 combined single limit each accident for bodily injury and property damage. The umbrella or excess liability coverage required under Section 7-1.12B(4)(b) also applies to automobile liability.

7-1.12B(6) Policy Forms, Endorsements, and Certificates

• The Contractor shall provide its General Liability Insurance under Commercial General Liability policy form No. CG0001 as published by the Insurance Services Office (ISO) or under a policy form at least as broad as policy form No. CG0001.

7-1.12B(7) Deductibles

• The State may expressly allow deductible clauses, which it does not consider excessive, overly broad, or harmful to the interests of the State. Regardless of the allowance of exclusions or deductions by the State, the Contractor is responsible for any deductible amount and shall warrant that the coverage provided to the State is in accordance with Section 7-1.12B, "Insurance."

7-1.12B(8) Enforcement

- The Department may assure the Contractor's compliance with its insurance obligations. Ten days before an insurance policy lapses or is canceled during the contract period, the Contractor shall submit to the Department evidence of renewal or replacement of the policy.
- If the Contractor fails to maintain any required insurance coverage, the Department may maintain this coverage and withhold or charge the expense to the Contractor or terminate the Contractor's control of the work in accordance with Section 8-1.08, "Termination of Control."
- The Contractor is not relieved of its duties and responsibilities to indemnify, defend, and hold harmless the State, its officers, agents, and employees by the Department's acceptance of insurance policies and certificates.
- Minimum insurance coverage amounts do not relieve the Contractor for liability in excess of such coverage, nor do they preclude the State from taking other actions available to it, including the withholding of funds under this contract.

7-1.12B(9) Self-Insurance

- Self-insurance programs and self-insured retentions in insurance policies are subject to separate annual review and approval by the State.
- If the Contractor uses a self-insurance program or self-insured retention, the Contractor shall provide the State with the same protection from liability and defense of suits as would be afforded by first-dollar insurance. Execution of the contract is the Contractor's acknowledgement that the Contractor will be bound by all laws as if the Contractor were an insurer as defined under Insurance Code Section 23 and that the self-insurance program or self-insured retention shall operate as insurance as defined under Insurance Code Section 22.

SECTION 9: MEASUREMENT AND PAYMENT

Issue Date: June 30, 2006

The third paragraph of Section 9-1.03, "Work Performed by Contractor," of the Standard Specifications is amended to read:

- The above markups shall constitute full compensation for all delay costs, overhead costs and profit which shall be deemed to include all items of expense not specifically designated as cost or equipment rental in Sections 9-1.03A(1), "Labor," 9-1.03A(2), "Materials," and 9-1.03A(3), "Equipment Rental." The total payment made as provided above shall be deemed to be the actual cost of the work and shall constitute full compensation therefor.

Section 9-1.04, "Notice of Potential Claim," of the Standard Specifications is amended to read:

9-1.04 NOTICE OF POTENTIAL CLAIM

- It is the intention of this section that disputes between the parties arising under and by virtue of the contract be brought to the attention of the Engineer at the earliest possible time in order that the matters may be resolved, if possible, or other appropriate action promptly taken.
- Disputes will not be considered unless the Contractor has first complied with specified notice or protest requirements, including Section 4-1.03, "Changes," Section 5-1.116, "Differing Site Conditions," Section 8-1.06, "Time of Completion," Section 8-1.07, "Liquidated Damages," and Section 8-1.10, "Utility and Non-Highway Facilities."
- For disputes arising under and by virtue of the contract, including an act or failure to act by the Engineer, the Contractor shall provide a signed written initial notice of potential claim to the Engineer within 5 days from the date the dispute first arose. The initial notice of potential claim shall provide the nature and

circumstances involved in the dispute which shall remain consistent through the dispute. The initial notice of potential claim shall be submitted on Form CEM-6201A furnished by the Department and shall be certified with reference to the California False Claims Act, Government Code Sections 12650-12655. The Contractor shall assign an exclusive identification number for each dispute, determined by chronological sequencing, based on the date of the dispute.

- The exclusive identification number for each dispute shall be used on the following corresponding documents:

A. Initial notice of potential claim.
B. Supplemental notice of potential claim.
C. Full and final documentation of potential claim.
D. Corresponding claim included in the Contractor's written statement of claims.

- The Contractor shall provide the Engineer the opportunity to examine the site of work within 5 days from the date of the initial notice of potential claim. The Contractor shall proceed with the performance of contract work unless otherwise specified or directed by the Engineer.
- Throughout the disputed work, the Contractor shall maintain records that provide a clear distinction between the incurred direct costs of disputed work and that of undisputed work. The Contractor shall allow the Engineer access to the Contractor's project records deemed necessary by the Engineer to evaluate the potential claim within 20 days of the date of the Engineer's written request.
- Within 15 days of submitting the initial notice of potential claim, the Contractor shall provide a signed supplemental notice of potential claim to the Engineer that provides the following information:

A. The complete nature and circumstances of the dispute which caused the potential claim.
B. The contract provisions that provide the basis of claim.
C. The estimated cost of the potential claim, including an itemized breakdown of individual costs and how the estimate was determined.
D. A time impact analysis of the project schedule that illustrates the effect on the scheduled completion date due to schedule changes or disruptions where a request for adjustment of contract time is made.

- The information provided in items A and B above shall provide the Contractor's complete reasoning for additional compensation or adjustments.
- The supplemental notice of potential claim shall be submitted on Form CEM-6201B furnished by the Department and shall be certified with reference to the California False Claims Act, Government Code Sections 12650-12655. The Engineer will evaluate the information presented in the supplemental notice of potential claim and provide a written response to the Contractor within 20 days of its receipt. If the estimated cost or effect on the scheduled completion date changes, the Contractor shall update information in items C and D above as soon as the change is recognized and submit this information to the Engineer.
- Within 30 days of the completion of work related to the potential claim, the Contractor shall provide the full and final documentation of potential claim to the Engineer that provides the following information:

A. A detailed factual narration of events fully describing the nature and circumstances that caused the dispute, including, but not limited to, necessary dates, locations, and items of work affected by the dispute.
B. The specific provisions of the contract that support the potential claim and a statement of the reasons these provisions support and provide a basis for entitlement of the potential claim.
C. When additional monetary compensation is requested, the exact amount requested calculated in conformance with Section 9-1.03, "Force Account Payment," or Section 8-1.09, "Right of Way Delays,"

including an itemized breakdown of individual costs. These costs shall be segregated into the following cost categories:

1. Labor – A listing of individuals, classifications, regular hours and overtime hours worked, dates worked, and other pertinent information related to the requested reimbursement of labor costs.
2. Materials – Invoices, purchase orders, location of materials either stored or incorporated into the work, dates materials were transported to the project or incorporated into the work, and other pertinent information related to the requested reimbursement of material costs.
3. Equipment – Listing of detailed description (make, model, and serial number), hours of use, dates of use and equipment rates. Equipment rates shall be at the applicable State rental rate as listed in the Department of Transportation publication entitled "Labor Surcharge and Equipment Rental Rates," in effect when the affected work related to the dispute was performed.
4. Other categories as specified by the Contractor or the Engineer.

D. When an adjustment of contract time is requested the following information shall be provided:

1. The specific dates for which contract time is being requested.
2. The specific reasons for entitlement to a contract time adjustment.
3. The specific provisions of the contract that provide the basis for the requested contract time adjustment.
4. A detailed time impact analysis of the project schedule. The time impact analysis shall show the effect of changes or disruptions on the scheduled completion date to demonstrate entitlement to a contract time adjustment.

E. The identification and copies of the Contractor's documents and the substance of oral communications that support the potential claim.

- The full and final documentation of the potential claim shall be submitted on Form CEM-6201C furnished by the Department and shall be certified with reference to the California False Claims Act, Government Code Sections 12650-12655.
- Pertinent information, references, arguments, and data to support the potential claim shall be included in the full and final documentation of potential claim. Information submitted subsequent to the full and final documentation submittal will not be considered. Information required in the full and final documentation of potential claim, as listed in items A to E above, that is not applicable to the dispute may be exempted as determined by the Engineer. No full and final documentation of potential claim will be considered that does not have the same nature and circumstances, and basis of claim as those specified on the initial and supplemental notices of potential claim.
- The Engineer will evaluate the information presented in the full and final documentation of potential claim and provide a written response to the Contractor within 30 days of its receipt unless otherwise specified. The Engineer's receipt of the full and final documentation of potential claim shall be evidenced by postal receipt or the Engineer's written receipt if delivered by hand. If the full and final documentation of potential claim is submitted by the Contractor after acceptance of the work by the Director, the Engineer need not provide a written response.
- Provisions in this section shall not apply to those claims for overhead costs and administrative disputes that occur after issuance of the proposed final estimate. Administrative disputes are disputes of administrative deductions or retentions, contract item quantities, contract item adjustments, interest payments, protests of contract change orders as provided in Section 4-1.03A, "Procedure and Protest," and protests of the weekly statement of working days as provided in Section 8-1.06, "Time of Completion." Administrative disputes that occur prior to issuance of the proposed final estimate shall follow applicable requirements of this section.

Information listed in the supplemental notice and full and final documentation of potential claim that is not applicable to the administrative dispute may be exempted as determined by the Engineer.

- Unless otherwise specified in the special provisions, the Contractor may pursue the administrative claim process pursuant to Section 9-1.07B, "Final Payment and Claims," for any potential claim found by the Engineer to be without merit.
- Failure of the Contractor to conform to specified dispute procedures shall constitute a failure to pursue diligently and exhaust the administrative procedures in the contract, and is deemed as the Contractor's waiver of the potential claim and a waiver of the right to a corresponding claim for the disputed work in the administrative claim process in conformance with Section 9-1.07B, "Final Payment of Claims," and shall operate as a bar to arbitration pursuant to Section 10240.2 of the California Public Contract Code.

Section 9-1.07B, "Final Payment and Claims," of the Standard Specifications is amended to read:

9-1.07B Final Payment and Claims

- After acceptance by the Director, the Engineer will make a proposed final estimate in writing of the total amount payable to the Contractor, including an itemization of the total amount, segregated by contract item quantities, extra work and other bases for payment, and shall also show each deduction made or to be made for prior payments and amounts to be kept or retained under the provisions of the contract. Prior estimates and payments shall be subject to correction in the proposed final estimate. The Contractor shall submit written approval of the proposed final estimate or a written statement of claims arising under or by virtue of the contract so that the Engineer receives the written approval or statement of claims no later than close of business of the thirtieth day after receiving the proposed final estimate. If the thirtieth day falls on a Saturday, Sunday or legal holiday, then receipt of the written approval or statement of claims by the Engineer shall not be later than close of business of the next business day. The Contractor's receipt of the proposed final estimate shall be evidenced by postal receipt. The Engineer's receipt of the Contractor's written approval or statement of claims shall be evidenced by postal receipt or the Engineer's written receipt if delivered by hand.
- On the Contractor's approval, or if the Contractor files no claim within the specified period of 30 days, the Engineer will issue a final estimate in writing in conformance with the proposed final estimate submitted to the Contractor, and within 30 days thereafter the State will pay the entire sum so found to be due. That final estimate and payment thereon shall be conclusive and binding against both parties to the contract on all questions relating to the amount of work done and the compensation payable therefor, except as otherwise provided in Sections 9-1.03C, "Records," and 9-1.09, "Clerical Errors."
- If the Contractor within the specified period of 30 days files claims, the Engineer will issue a semifinal estimate in conformance with the proposed final estimate submitted to the Contractor and within 30 days thereafter the State will pay the sum found to be due. The semifinal estimate and corresponding payment shall be conclusive and binding against both parties to the contract on each question relating to the amount of work done and the compensation payable therefor, except insofar as affected by the claims filed within the time and in the manner required hereunder and except as otherwise provided in Sections 9-1.03C, "Records," and 9-1.09, "Clerical Errors."
- Except for claims for overhead costs and administrative disputes that occur after issuance of the proposed final estimate, the Contractor shall only provide the following two items of information for each claim:

A. The exclusive identification number that corresponds to the supporting full and final documentation of potential claim.
B. The final amount of requested additional compensation.

- If the final amount of requested additional compensation is different than the amount of requested compensation included in the full and final documentation of potential claim, the Contractor shall provide in the

written statement of claims the reasons for the changed amount, the specific provisions of the contract which support the changed amount, and a statement of the reasons the provisions support and provide a basis for the changed amount. If the Contractor's claim fails to provide an exclusive identification number or if there is a disparity in the provided exclusive identification number, the Engineer will notify the Contractor of the omission or disparity. The Contractor shall have 15 days after receiving notification from the Engineer to correct the omission or disparity. If after the 15 days has elapsed, there is still an omission or disparity of the exclusive identification number assigned to the claim, the Engineer will assign the number. No claim will be considered that has any of the following deficiencies:

A. The claim does not have the same nature, circumstances, and basis as the corresponding full and final documentation of potential claim.
B. The claim does not have a corresponding full and final documentation of potential claim.
C. The claim was not included in the written statement of claims.
D. The Contractor did not comply with applicable notice or protest requirements of Sections 4-1.03, "Changes," 5-1.116, "Differing Site Condition," 8-1.06, "Time of Completion," 8-1.07, "Liquidated Damages," 8-1.10, "Utility and Non-Highway Facilities," and 9-1.04, "Notice of Potential Claim."

- Administrative disputes that occur after issuance of the proposed final estimate shall be included in the Contractor's written statement of claims in sufficient detail to enable the Engineer to ascertain the basis and amounts of those claims.
- The Contractor shall keep full and complete records of the costs and additional time incurred for work for which a claim for additional compensation is made. The Engineer or designated claim investigators or auditors shall have access to those records and any other records as may be required by the Engineer to determine the facts or contentions involved in the claims. Failure to permit access to those records shall be sufficient cause for denying the claims.

- The written statement of claims submitted by the Contractor shall be accompanied by a notarized certificate containing the following language:

> Under the penalty of law for perjury or falsification and with specific reference to the California False Claims Act, Government Code Section 12650 et. seq., the undersigned,
>
> _____ .
> *(name)*
>
> _____ *of*
> *(title)*
>
> _____ .
> *(company)*
>
> hereby certifies that the claim for the additional compensation and time, if any, made herein for the work on this contract is a true statement of the actual costs incurred and time sought, and is fully documented and supported under the contract between parties.
>
> Dated _____
>
> /s/ _____
>
> Subscribed and sworn before me this _____ day
>
> of _____ .
>
> _____
> *(Notary Public)*
> My Commission
> Expires _____

- Failure to submit the notarized certificate will be sufficient cause for denying the claim.
- Any claim for overhead, in addition to being certified as stated above, shall be supported and accompanied by an audit report of an independent Certified Public Accountant. Omission of a supporting audit report of an independent Certified Public Accountant shall result in denial of the claim and shall operate as a bar to arbitration, as to the claim, in conformance with the requirements in Section 10240.2 of the California Public Contract Code. Any claim for overhead shall be subject to audit by the State at its discretion. The costs of performing an audit examination and submitting the report shall be borne by the Contractor. The Department will deduct an offset amount for field and home office overhead paid on all added work from any claim for overhead as appropriate, as determined by the Department. The value of the added work equals the value of the work completed minus the total bid. The home office overhead offset equals 5 percent of the added work. The field office overhead offset equals 5-1/2 percent of the added work. The Certified Public Accountant's audit examination shall be performed in conformance with the requirements of the American Institute of Certified Public Accountants Attestation Standards. The audit examination and report shall depict the Contractor's project and company-wide financial records and shall specify the actual overall average daily rates for both field and home office overhead for the entire duration of the project, and whether the costs have been properly allocated. The rates of field and home office overhead shall exclude unallowable costs as determined in Title 48 of the Federal Acquisition Regulations, Chapter 1, Part 31. The audit examination and report shall determine if the rates of field and home office overhead are:

A. Allowable in conformance with the requirements in Title 48 of the Federal Acquisition Regulations, Chapter 1, Part 31.
B. Adequately supported by reliable documentation.
C. Related solely to the project under examination.

- Costs or expenses incurred by the State in reviewing or auditing claims that are not supported by the Contractor's cost accounting or other records shall be deemed to be damages incurred by the State within the meaning of the California False Claims Act.
- If the Engineer determines that a claim requires additional analysis, the Engineer will schedule a board of review meeting. The Contractor shall meet with the review board or person and make a presentation in support of the claim. Attendance by the Contractor at the board of review meeting shall be mandatory.
- The District Director of the District that administered the contract will make the final determination of any claims which remain in dispute after completion of claim review by the Engineer or board of review meeting.

The final determination of claims will be sent to the Contractor by hand delivery or deposit in the U.S. mail. The Engineer will then make and issue the Engineer's final estimate in writing and within 30 days thereafter the State will pay the entire sum, if any, found due thereon. That final estimate shall be conclusive and binding against both parties to the contract on all questions relating to the amount of work done and the compensation payable therefor, except as otherwise provided in Sections 9-1.03C, "Records," and 9-1.09, "Clerical Errors."

- Failure of the Contractor to conform to the specified dispute procedures shall constitute a failure to pursue diligently and exhaust the administrative procedures in the contract and shall operate as a bar to arbitration in conformance with the requirements in Section 10240.2 of the California Public Contract Code.

SECTION 12: CONSTRUCTION AREA TRAFFIC CONTROL DEVICES

Issue Date: June 30, 2006

The second paragraph of Section 12-1.01, "Description," of the Standard Specifications is amended to read:

- Attention is directed to Part 6 of the MUTCD and of the MUTCD California Supplement. Nothing in this Section 12 is to be construed as to reduce the minimum standards in these manuals.

Section 12-2.01, "Flaggers," of the Standard Specifications is amended to read:

- Flaggers while on duty and assigned to traffic control or to give warning to the public that the highway is under construction and of any dangerous conditions to be encountered as a result thereof, shall perform their duties and shall be provided with the necessary equipment in conformance with Part 6 of the MUTCD and of the MUTCD California Supplement. The equipment shall be furnished and kept clean and in good repair by the Contractor at the Contractor's expense.

The first paragraph of Section 12-3.01, "General," of the Standard Specifications is amended to read:

- In addition to the requirements in Part 6 of the MUTCD and of the MUTCD California Supplement, all devices used by the Contractor in the performance of the work shall conform to the provisions in this Section 12-3.

The fifth paragraph of Section 12-3.01, "General," of the Standard Specifications is amended to read:

- Retroreflective sheeting shall conform to the requirements in ASTM Designation: D 4956 and to the special provisions.

The first paragraph of Section 12-3.06, "Construction Area Signs," of the Standard Specifications is amended to read:

- The term "Construction Area Signs" shall include all temporary signs required for the direction of public traffic through or around the work during construction. Construction area signs are shown in or referred to in Part 6 of the MUTCD and of the MUTCD California Supplement.

The fourth paragraph of Section 12-3.06, "Construction Area Signs," of the Standard Specifications is amended to read:

- All construction area signs shall conform to the dimensions, color and legend requirements of the plans, Part 6 of the MUTCD, Part 6 of the MUTCD California Supplement, and these specifications. All sign panels shall be the product of a commercial sign manufacturer, and shall be as specified in these specifications.

The eighth paragraph of Section 12-3.06, "Construction Area Signs," of the Standard Specifications is amended to read:

- Used signs with the specified sheeting material will be considered satisfactory if they conform to the requirements for visibility and legibility and the colors conform to the requirements in Part 6 of the MUTCD and of the MUTCD California Supplement. A significant difference between day and nighttime retroreflective color will be grounds for rejecting signs.

Section 12-3.06A, "Stationary Mounted Signs," of the Standard Specifications is amended by deleting the third, fourth, fifth, and sixth paragraphs.

SECTION 15: EXISTING HIGHWAY FACILITIES

Issue Date: November 2, 2004

The sixth paragraph of Section 15-2.07, "Payment," of the Standard Specifications is amended to read:

- Full compensation for removing, salvaging, reconstructing, relocating or resetting end caps, return caps, terminal sections, and buried post anchors, for metal beam guard railings and thrie beam barriers, and for connecting reconstructed, relocated or reset railings and barriers to new and existing facilities, including connections to concrete, shall be considered as included in the contract price paid per meter for the type of railing or barrier work involved and no additional compensation will be allowed therefor.

SECTION 19: EARTHWORK

Issue Date: December 31, 2001

The third paragraph of Section 19-1.02, "Preservation of Property," of the Standard Specifications is amended to read:

- In addition to the provisions in Sections 5-1.02, "Plans and Working Drawings," and 5-1.02A, "Excavation Safety Plans," detailed plans of the protective systems for excavations on or affecting railroad property will be reviewed for adequacy of protection provided for railroad facilities, property, and traffic. These plans shall be submitted at least 9 weeks before the Contractor intends to begin excavation requiring the protective systems. Approval by the Engineer of the detailed plans for the protective systems will be contingent upon the plans being satisfactory to the railroad company involved.

SECTION 20: EROSION CONTROL AND HIGHWAY PLANTING

Issue Date: November 18, 2005

Section 20-2.25, "Backflow Preventers," of the Standard Specifications is amended to read:

20-2.25 BACKFLOW PREVENTERS

- Backflow preventers shall be one of the reduced pressure principle devices as specified in these specifications and the special provisions.
- Backflow preventers shall be factory assembled and shall include 2 check valves, one pressure differential relief valve, 2 shut-off valves and 4 test cocks. Backflow preventer and valves shall be the same size as the pipeline in which they are installed, unless otherwise shown on the plans.
- Backflow preventer shut-off valves shall be manufactured from iron or bronze and shall be either resilient wedged gate valves, resilient seated and fully ported ball valves, or resilient seated butterfly valves. Threaded type shut-off valves shall be provided with a union on one side of each valve. Unions shall be brass or malleable iron.

Section 20-5.03J, "Check and Test Backflow Preventers," of the Standard Specifications is amended to read:

20-5.03J Check and Test Backflow Preventers

- Backflow preventers shall be checked and tested for proper operation by a certified Backflow Preventer Tester. The tester shall hold a valid certification as a Backflow Preventer Tester from the local governing authority in which the device to be tested is located. The local governing authority shall be the county, city or water purveyor having the governing authority over testing of backflow preventers involved. If the local governing authority does not have a certification program for Backflow Preventer Testers, the tester shall have a certificate from one of the following:

A. The American Water Works Association.
B. A county which has a certification program for Backflow Preventer Testers.

- Tests for proper operation shall conform to the requirements of the governing authority.
- The Engineer shall be notified at least 5 days prior to testing backflow preventers.
- One copy of the test results for each backflow preventer tested shall be furnished to the Engineer.
- Backflow preventers, installed by the Contractor, failing required tests shall be repaired at the Contractor's expense.

SECTION 29: TREATED PERMEABLE BASES

Issue Date: November 18, 2005

The fourth paragraph of Section 29-1.02A, "Asphalt Treated Permeable Base," of the Standard Specifications is amended to read:

- The type and grade of asphalt binder to be mixed with aggregate will be specified in the special provisions.

SECTION 39: ASPHALT CONCRETE

Issue Date: November 18, 2005

The fifth paragraph of Section 39-2.01, "Asphalts," of the Standard Specifications is amended to read:

• Paving asphalt to be used as a binder for pavement reinforcing fabric shall be a steam-refined paving asphalt conforming to the provisions in Section 92, "Asphalts," and shall be Grade PG 70-10.

SECTION 40: PORTLAND CEMENT CONCRETE PAVEMENT

Issue Date: June 30, 2006

The fourth paragraph of Section 40-1.08, "Joints," of the Standard Specifications is amended to read:

• Straight tie bars shall be deformed reinforcing steel bars conforming to the requirements in ASTM Designation: A 615/A 615M, Grade 280 or 420; ASTM Designation: A 996/A 996M, Grade 350 or 420; or ASTM Designation: A 706/A 706M.

SECTION 42: GROOVE AND GRIND PAVEMENT

Issue Date: December 31, 2001

The last sentence of the first subparagraph of the third paragraph in Section 42-2.02, "Construction," of the Standard Specifications is amended to read:

• After grinding has been completed, the pavement shall conform to the straightedge and profile requirements specified in Section 40-1.10, "Final Finishing."

SECTION 49: PILING

Issue Date: June 30, 2006

The first paragraph in Section 49-1.03, "Determination of Length," of the Standard Specifications is amended to read:

• Foundation piles of any material shall be of such length as is required to obtain the specified penetration, and to extend into the cap or footing block as shown on the plans, or specified in the special provisions.

The fourth paragraph in Section 49-1.03, "Determination of Length," of the Standard Specifications is amended to read:

• Modification to the specified installation methods and specified pile tip elevation will not be considered at locations where tension or lateral load demands control design pile tip elevations or when the plans state that specified pile tip elevation shall not be revised.

The sixth and seventh paragraphs in Section 49-1.03, "Determination of Length," of the Standard Specifications are amended to read:

• Indicator compression pile load testing shall conform to the requirements in ASTM Designation: D 1143-81. The pile shall sustain the first compression test load applied which is equal to the nominal

resistance in compression, as shown on the plans, with no more than 13 mm total vertical movement at the top of the pile measured relative to the top of the pile prior to the start of compression load testing.

- Indicator tension pile load testing shall conform to the requirements in ASTM Designation: D 3689-90. The loading apparatus described as "Load Applied to Pile by Hydraulic Jack(s) Acting at One End of Test Beam(s) Anchored to the Pile" shall not be used. The pile shall sustain the first tension test load applied which is equal to the nominal resistance in tension, as shown on the plans, with no more than 13 mm total vertical movement at the top of the pile measured relative to the top of the pile prior to the start of tension load testing.

The ninth paragraph in Section 49-1.03, "Determination of Length," of the Standard Specifications is amended to read:

- For driven piling, the Contractor shall furnish piling of sufficient length to obtain the specified tip elevation shown on the plans or specified in the special provisions. For cast-in-drilled-hole concrete piling, the Contractor shall construct piling of such length to develop the nominal resistance in compression and to obtain the specified tip elevation shown on the plans or specified in the special provisions.

The tenth paragraph in Section 49-1.03, "Determination of Length," of the Standard Specifications is deleted.

The fourth paragraph in Section 49-1.04, "Load Test Piles," of the Standard Specifications is amended to read:

- Load test piles and anchor piles which are not to be incorporated in the completed structure shall be removed in conformance with the provisions in Section 15-4.02, "Removal Methods," and the remaining holes shall be backfilled with earth or other suitable material approved by the Engineer.

The fifth paragraph in Section 49-1.04, "Load Test Piles," of the Standard Specifications is amended to read:

- Load test anchorages in piles used as anchor piles shall conform to the following requirements:

A. High strength threaded steel rods shall conform to the provisions for bars in Section 50-1.05, "Prestressing Steel," except Type II bars shall be used.
B. High strength steel plates shall conform to the requirements in ASTM Designation: A 709/A 709M, Grade 345.
C. Anchor nuts shall conform to the provisions in the second paragraph in Section 50-1.06, "Anchorages and Distribution."

The first paragraph in Section 49-1.05, "Driving Equipment," of the Standard Specifications is amended to read:

- Driven piles shall be installed with impact hammers that are approved in writing by the Engineer. Impact hammers shall be steam, hydraulic, air or diesel hammers. Impact hammers shall develop sufficient energy to drive the piles at a penetration rate of not less than 3 mm per blow at the specified nominal resistance.

The seventh paragraph in Section 49-1.05, "Driving Equipment," of the Standard Specifications is amended to read:

• When necessary to obtain the specified penetration and when authorized by the Engineer, the Contractor may supply and operate one or more water jets and pumps, or furnish the necessary drilling apparatus and drill holes not greater than the least dimension of the pile to the proper depth and drive the piles therein. Jets shall not be used at locations where the stability of embankments or other improvements would be endangered. In addition, for steel piles, steel shells, or steel casings, when necessary to obtain the specified penetration or to prevent damage to the pile during installation, the Contractor shall provide special driving tips or heavier pile sections or take other measures as approved by the Engineer.

• The use of followers or underwater hammers for driving piles will be permitted if authorized in writing by the Engineer. When a follower or underwater hammer is used, its efficiency shall be verified by furnishing the first pile in each bent or footing sufficiently long and driving the pile without the use of a follower or underwater hammer.

The second paragraph in Section 49-1.07, "Driving," of the Standard Specifications is amended to read:

• Timber piles shall be fresh-headed and square and when permitted by the Engineer, the heads of the piles may be protected by means of heavy steel or wrought iron rings. During driving operations timber piling shall be restrained from lateral movement at intervals not to exceed 6 m over the length between the driving head and the ground surface. During driving operations, the timber pile shall be kept moving by continuous operation of the hammer. When the blow count exceeds either 2 times the blow count required in 300 mm, or 3 times the blow count required in 75 mm for the nominal resistance as shown on the plans, computed in conformance with the provisions in Section 49-1.08, "Pile Driving Acceptance Criteria," additional aids shall be used to obtain the specified penetration. These aids may include the use of water jets or drilling, where permitted, or the use of a larger hammer employing a heavy ram striking with a low velocity.

Section 49-1.08, "Bearing Value and Penetration," of the Standard Specifications is amended to read:

49-1.08 PILE DRIVING ACCEPTANCE CRITERIA

• Except for piles to be load tested, driven piles shall be driven to a value of not less than the nominal resistance shown on the plans unless otherwise specified in the special provisions or permitted in writing by the Engineer. In addition, when a pile tip elevation is specified, driven piles shall penetrate at least to the specified tip elevation, unless otherwise permitted in writing by the Engineer. Piles to be load tested shall be driven to the specified tip elevation.

• When the pile nominal resistance is omitted from the plans or the special provisions, timber piles shall be driven to a nominal resistance of 800 kN, and steel and concrete piles shall be driven to a nominal resistance of 1250 kN.

• The nominal resistance for driven piles shall be determined from the following formula in which "R_u" is the nominal resistance in kilonewtons, "E_r" is the manufacturer's rating for joules of energy developed by the hammer at the observed field drop height, and "N" is the number of hammer blows in the last 300 millimeters. (maximum value to be used for N is 100):

$$R_u = (7 * (E_r)^{1/2} * \log_{10} (0.83 * N)) - 550$$

The first paragraph in Section 49-2.03, "Requirements," of the Standard Specifications is amended to read:

• When preservative treatment of timber piles is required by the plans or specified in the special provisions, the treatment shall conform to the provisions in Section 58, "Preservative Treatment of Lumber, Timber and Piling," and the applicable AWPA Use Category.

The first paragraph in Section 49-2.04, "Treatment of Pile Heads," of the Standard Specifications is amended to read:

A. An application of wood preservative conforming to the provisions in Section 58-1.04, "Wood Preservative for Manual Treatment," shall first be applied to the head of the pile and a protective cap shall then be built up by applying alternate layers of loosely woven fabric and hot asphalt or tar similar to membrane waterproofing, using 3 layers of asphalt or tar and 2 layers of fabric. The fabric shall measure at least 150 mm more in each direction than the diameter of the pile and shall be turned down over the pile and the edges secured by binding with 2 turns of No. 10 galvanized wire. The fabric shall be wired in advance of the application of the final layer of asphalt or tar, which shall extend down over the wiring.
B. The sawed surface shall be covered with 3 applications of a hot mixture of 60 percent creosote and 40 percent roofing pitch, or thoroughly brushcoated with 3 applications of hot creosote and covered with hot roofing pitch. A covering of 3.50-mm nominal thickness galvanized steel sheet shall be placed over the coating and bent down over the sides of each pile to shed water.

Section 49-3.01, "Description," of the Standard Specifications is amended by deleting the fifth paragraph.

The sixth and seventh paragraphs in Section 49-3.01, "Description," of the Standard Specifications are amended to read:

- Except for precast prestressed concrete piles in a corrosive environment, lifting anchors used in precast prestressed concrete piles shall be removed, and the holes filled in conformance with the provisions in Section 51-1.18A, "Ordinary Surface Finish."
- Lifting anchors used in precast prestressed concrete piles in a corrosive environment shall be removed to a depth of at least 25 mm below the surface of the concrete, and the resulting hole shall be filled with epoxy adhesive before the piles are delivered to the job site. The epoxy adhesive shall conform to the provisions in Sections 95-1, "General," and 95-2.01, "Binder (Adhesive), Epoxy Resin Base (State Specification 8040-03)."

The first and second paragraphs in Section 49-4.01, "Description," of the Standard Specifications are amended to read:

- Cast-in-place concrete piles shall consist of one of the following:

  A. Steel shells driven permanently to the required nominal resistance and penetration and filled with concrete.
  B. Steel casings installed permanently to the required penetration and filled with concrete.
  C. Drilled holes filled with concrete.
  D. Rock sockets filled with concrete.

- The drilling of holes shall conform to the provisions in these specifications. Concrete filling for cast-in-place concrete piles is designated by compressive strength and shall have a minimum 28-day compressive strength of 25 MPa. At the option of the Contractor, the combined aggregate grading for the concrete shall be either the 25-mm maximum grading, the 12.5-mm maximum grading, or the 9.5-mm maximum grading. Concrete shall conform to the provisions in Section 90, "Portland Cement Concrete," and Section 51, "Concrete Structures." Reinforcement shall conform to the provisions in Section 52, "Reinforcement."

The fourth paragraph in Section 49-4.03, "Drilled Holes," of the Standard Specifications is amended to read:

• After placing reinforcement and prior to placing concrete in the drilled hole, if caving occurs or deteriorated foundation material accumulates on the bottom of the hole, the bottom of the drilled hole shall be cleaned. The Contractor shall verify that the bottom of the drilled hole is clean.

The first and second paragraphs in Section 49-4.04, "Steel Shells," of the Standard Specifications are amended to read:

• Steel shells shall be sufficiently watertight to exclude water during the placing of concrete. The shells may be cylindrical or tapered, step-tapered, or a combination of either, with cylindrical sections.

The first paragraph in Section 49-4.05, "Inspection," of the Standard Specifications is amended to read:

• After being driven and prior to placing reinforcement and concrete therein, the steel shells shall be examined for collapse or reduced diameter at any point. Any shell which is improperly driven or broken or shows partial collapse to such an extent as to materially decrease its nominal resistance will be rejected. Rejected shells shall be removed and replaced, or a new shell shall be driven adjacent to the rejected shell. Rejected shells which cannot be removed shall be filled with concrete by the Contractor at the Contractor's expense. When a new shell is driven to replace a rejected shell, the Contractor, at the Contractor's expense, shall enlarge the footing as determined necessary by the Engineer.

The third paragraph in Section 49-5.01, "Description," of the Standard Specifications is amended to read:

• Steel pipe piles shall conform to the following requirements:

1. Steel pipe piles less than 360 mm in diameter shall conform to the requirements in ASTM Designation: A 252, Grade 2 or 3.
2. Steel pipe piles 360 mm and greater in diameter shall conform to the requirements in ASTM Designation: A 252, Grade 3.
3. Steel pipe piles shall be of the nominal diameter and nominal wall thickness shown on the plans or specified in the special provisions.
4. The carbon equivalency (CE) of steel for steel pipe piles, as defined in AWS D 1.1, Section XI5.1, shall not exceed 0.45.
5. The sulfur content of steel for steel pipe piles shall not exceed 0.05-percent.
6. Seams in steel pipe piles shall be complete penetration welds.

The first paragraph in Section 49-6.01, "Measurement," of the Standard Specifications is amended to read:

• The length of timber, steel, and precast prestressed concrete piles, and of cast-in-place concrete piles consisting of driven shells filled with concrete, shall be the greater of the following:

A. The total length in place in the completed work, measured along the longest side, from the tip of the pile to the plane of pile cut-off.
B. The length measured along the longest side, from the tip elevation shown on the plans or the tip elevation ordered by the Engineer, to the plane of pile cut-off.

The third paragraph in Section 49-6.02, "Payment," of the Standard Specifications is amended to read:

• The contract price paid per meter for cast-in-drilled-hole concrete piling shall include full compensation for furnishing all labor, materials, tools, equipment, and incidentals, and for doing all work involved in drilling

holes, disposing of material resulting from drilling holes, temporarily casing holes and removing water when necessary, furnishing and placing concrete and reinforcement, and constructing reinforced concrete extensions, complete in place, to the required penetration, as shown on the plans, as specified in these specifications and in the special provisions, and as directed by the Engineer.

The seventh paragraph in Section 49-6.02, "Payment," of the Standard Specifications is amended to read

- The contract unit price paid for drive pile shall include full compensation for furnishing all labor, materials, tools, equipment, and incidentals, and for doing all the work involved in driving timber, concrete and steel piles, driving steel shells for cast-in-place concrete piles, placing filling materials for cast-in-place concrete piles and cutting off piles, all complete in place to the required nominal resistance and penetration as shown on the plans and as specified in these specifications and the special provisions, and as directed by the Engineer.

The ninth paragraph in Section 49-6.02, "Payment," of the Standard Specifications is amended to read:

- Full compensation for all jetting, drilling, providing special driving tips or heavier sections for steel piles or shells, or other work necessary to obtain the specified penetration and nominal resistance of the piles, for predrilling holes through embankment and filling the space remaining around the pile with sand or pea gravel, for disposing of material resulting from jetting, drilling or predrilling holes, and for all excavation and backfill involved in constructing concrete extensions as shown on the plans, and as specified in these specifications and the special provisions, and as directed by the Engineer shall be considered as included in the contract unit price paid for drive pile or in the contract price paid per meter for cast-in-drilled-hole concrete piling, and no additional compensation will be allowed therefor.

Section 49-6.02, "Payment," of the Standard Specifications is amended by adding the following paragraphs:

- Full compensation for furnishing and placing additional testing reinforcement, for load test anchorages, and for cutting off test piles, shall be considered as included in the contract price paid for piling of the type or class shown in the Engineer's Estimate, and no additional compensation will be allowed.

- No additional compensation or extension of time will be made for additional foundation investigation, installation and testing of indicator piling, cutting off piling and restoring the foundation investigation and indicator pile sites, and review of request by the Engineer.

SECTION 50: PRESTRESSING CONCRETE

Issue Date: June 30, 2006

Section 50-1.02, "Drawings," of the Standard Specifications is amended by adding the following paragraph after the second paragraph:

- Each working drawing submittal shall consist of plans for a single bridge or portion thereof. For multi-frame bridges, each frame shall require a separate working drawing submittal.

The eighth paragraph of Section 50-1.02, "Drawings," of the Standard Specifications is deleted.

Section 50-1.05, "Prestressing Steel," of the Standard Specifications is amended to read:

• Prestressing steel shall be high-tensile wire conforming to the requirements in ASTM Designation: A 421, including Supplement I; high-tensile seven-wire strand conforming to the requirements in ASTM Designation: A 416; or uncoated high-strength steel bars conforming to the requirements in ASTM Designation: A 722, including all supplementary requirements. The maximum mass requirement of ASTM Designation: A 722 will not apply.

• In addition to the requirements of ASTM Designation: A 722, for deformed bars, the reduction of area shall be determined from a bar from which the deformations have been removed. The bar shall be machined no more than necessary to remove the deformations over a length of 300 mm, and reduction will be based on the area of the machined portion.

• In addition to the requirements specified herein, epoxy-coated seven-wire prestressing steel strand shall be grit impregnated and filled in conformance with the requirements in ASTM Designation: A 882/A 882M, including Supplement I, and the following:

A. The coating material shall be on the Department's list of approved coating materials for epoxy-coated strand, available from the Transportation Laboratory.
B. The film thickness of the coating after curing shall be 381 µm to 1143 µm.
C. Prior to coating the strand, the Contractor shall furnish to the Transportation Laboratory a representative 230-g sample from each batch of epoxy coating material to be used. Each sample shall be packaged in an airtight container identified with the manufacturer's name and batch number.
D. Prior to use of the epoxy-coated strand in the work, written certifications referenced in ASTM Designation: A 882/A 882M, including a representative load-elongation curve for each size and grade of strand to be used and a copy of the quality control tests performed by the manufacturer, shall be furnished to the Engineer.
E. In addition to the requirements in Section 50-1.10, "Samples for Testing," four 1.5-m long samples of coated strand and one 1.5-m long sample of uncoated strand of each size and reel shall be furnished to the Engineer for testing. These samples, as selected by the Engineer, shall be representative of the material to be used in the work.
F. Epoxy-coated strand shall be cut using an abrasive saw.
G. All visible damage to coatings caused by shipping and handling, or during installation, including cut ends, shall be repaired in conformance with the requirements in ASTM Designation: A 882/A 882M. The patching material shall be furnished by the manufacturer of the epoxy powder and shall be applied in conformance with the manufacturer's written recommendations. The patching material shall be compatible with the original epoxy coating material and shall be inert in concrete.

• All bars in any individual member shall be of the same grade, unless otherwise permitted by the Engineer.

• When bars are to be extended by the use of couplers, the assembled units shall have a tensile strength of not less than the manufacturer's minimum guaranteed ultimate tensile strength of the bars. Failure of any one sample to meet this requirement will be cause for rejection of the heat of bars and lot of couplers. The location of couplers in the member shall be subject to approval by the Engineer.

• Wires shall be straightened if necessary to produce equal stress in all wires or wire groups or parallel lay cables that are to be stressed simultaneously or when necessary to ensure proper positioning in the ducts.

• Where wires are to be button-headed, the buttons shall be cold formed symmetrically about the axes of the wires. The buttons shall develop the minimum guaranteed ultimate tensile strength of the wire. No cold forming process shall be used that causes indentations in the wire. Buttonheads shall not contain wide open splits, more than 2 splits per head, or splits not parallel with the axis of the wire.

• Prestressing steel shall be protected against physical damage and rust or other results of corrosion at all times from manufacture to grouting or encasing in concrete. Prestressing steel that has sustained physical

damage at any time shall be rejected. The development of visible rust or other results of corrosion shall be cause for rejection, when ordered by the Engineer.

- Epoxy-coated prestressing steel strand shall be covered with an opaque polyethylene sheeting or other suitable protective material to protect the strand from exposure to sunlight, salt spray, and weather. For stacked coils, the protective covering shall be draped around the perimeter of the stack. The covering shall be adequately secured; however, it should allow for air circulation around the strand to prevent condensation under the covering. Epoxy-coated strand shall not be stored within 300 m of ocean or tidal water for more than 2 months.
- Prestressing steel shall be packaged in containers or shipping forms for the protection of the steel against physical damage and corrosion during shipping and storage. Except for epoxy-coated strand, a corrosion inhibitor which prevents rust or other results of corrosion, shall be placed in the package or form, or shall be incorporated in a corrosion inhibitor carrier type packaging material, or when permitted by the Engineer, may be applied directly to the steel. The corrosion inhibitor shall have no deleterious effect on the steel or concrete or bond strength of steel to concrete. Packaging or forms damaged from any cause shall be immediately replaced or restored to original condition.
- The shipping package or form shall be clearly marked with a statement that the package contains high-strength prestressing steel, and the type of corrosion inhibitor used, including the date packaged.
- Prestressing steel for post-tensioning which is installed in members prior to placing and curing of the concrete, and which is not epoxy-coated, shall be continuously protected against rust or other results of corrosion, until grouted, by means of a corrosion inhibitor placed in the ducts or applied to the steel in the duct. The corrosion inhibitor shall conform to the provisions specified herein.
- When steam curing is used, prestressing steel for post-tensioning shall not be installed until the steam curing is completed.
- Water used for flushing ducts shall contain either quick lime (calcium oxide) or slaked lime (calcium hydroxide) in the amount of 0.01-kg/L. Compressed air used to blow out ducts shall be oil free.
- When prestressing steel for post-tensioning is installed in the ducts after completion of concrete curing, and if stressing and grouting are completed within 10 days after the installation of the prestressing steel, rust which may form during those 10 days will not be cause for rejection of the steel. Prestressing steel installed, tensioned, and grouted in this manner, all within 10 days, will not require the use of a corrosion inhibitor in the duct following installation of the prestressing steel. Prestressing steel installed as above but not grouted within 10 days shall be subject to all the requirements in this section pertaining to corrosion protection and rejection because of rust. The requirements in this section pertaining to tensioning and grouting within 10 days shall not apply to epoxy-coated prestressing steel strand.
- Any time prestressing steel for pretensioning is placed in the stressing bed and is exposed to the elements for more than 36 hours prior to encasement in concrete, adequate measures shall be taken by the Contractor, as approved by the Engineer, to protect the steel from contamination or corrosion.
- After final fabrication of the seven-wire prestressing steel strand, no electric welding of any form shall be performed on the prestressing steel. Whenever electric welding is performed on or near members containing prestressing steel, the welding ground shall be attached directly to the steel being welded.
- Pretensioned prestressing steel shall be cut off flush with the end of the member. For epoxy-coated prestressing steel, only abrasive saws shall be used to cut the steel. The exposed ends of the prestressing steel and a 25-mm strip of adjoining concrete shall be cleaned and painted. Cleaning shall be by wire brushing or abrasive blast cleaning to remove all dirt and residue on the metal or concrete surfaces. Immediately after cleaning, the surfaces shall be covered with one application of unthinned zinc-rich primer (organic vehicle type) conforming to the provisions in Section 91, "Paint," except that 2 applications shall be applied to surfaces which will not be covered by concrete or mortar. Aerosol cans shall not be used. The paint shall be thoroughly mixed at the time of application and shall be worked into any voids in the prestressing tendons.

The sixth paragraph of Section 50-1.08, "Prestressing," of the Standard Specifications is amended to read:

- The following formula and friction coefficients shall be used in calculating friction losses in tendons:

$To = Txe\ (\mu\alpha + KL)$

Where:

To = steel stress at jacking end
Tx = steel stress at any point x
e = base of Naperian logarithms
μ = friction curvature coefficient
α = total angular change of prestressing steel profile in radians from jacking end to point x
K = friction wobble coefficient (=0.00066/m)
L = length of prestressing steel from jacking end to point x

Type of Steel Tendon	Length of Tendon L(m)	Type of Duct	μ
Wire or Strand	0 to less than 183	Rigid or semi-rigid galvanized sheet metal	0.15
	183 to less than 275		0.20
	275 to less than 366		0.25
	Greater than or equal to 366		0.25*
Wire or Strand	All	Plastic	0.23
	All	Rigid Steel Pipes	0.25*
High Strength Bar	All	Rigid or semi-rigid galvanized sheet metal	0.30

* With the use of lubrication

The thirteenth and fourteenth paragraphs in Section 50-1.08, "Prestressing," of the Standard Specifications are amended to read:

- Prestressing steel in pretensioned members shall not be cut or released until the concrete in the member has attained a compressive strength of not less than the value shown on the plans or 28 MPa, whichever is greater. In addition to these concrete strength requirements, when epoxy-coated prestressing steel strand is used, the steel shall not be cut or released until the temperature of the concrete surrounding the strand is less than 65°C, and falling.
- When ordered by the Engineer, prestressing steel strands in pretensioned members, if tensioned individually, shall be checked by the Contractor for loss of prestress not more than 48 hours prior to placing concrete for the members. The method and equipment for checking the loss of prestress shall be subject to approval by the Engineer. Strands which show a loss of prestress in excess of 3 percent shall be retensioned to the original computed jacking stress.

The fifth paragraph in Section 50-1.10, "Samples for Testing," of the Standard Specifications is amended to read:

• The following samples of materials and tendons, selected by the Engineer from the prestressing steel at the plant or jobsite, shall be furnished by the Contractor to the Engineer well in advance of anticipated use:

A. For wire or bars, one 2-m long sample and for strand, one 1.5-m long sample, of each size shall be furnished for each heat or reel.
B. For epoxy-coated strand, one 1.5-m long sample of uncoated strand of each size shall be furnished for each reel.
C. If the prestressing tendon is a bar, one 2-m long sample shall be furnished and in addition, if couplers are to be used with the bar, two 1.25-m long samples of bar, equipped with one coupler and fabricated to fit the coupler, shall be furnished.

The second paragraph in Section 50-1.11, "Payment," of the Standard Specifications is amended to read:

• The contract lump sum prices paid for prestressing cast-in-place concrete of the types listed in the Engineer's Estimate shall include full compensation for furnishing all labor, materials, tools, equipment, and incidentals, and for doing all work involved in furnishing, placing, and tensioning the prestressing steel in cast-in-place concrete structures, complete in place, as shown on the plans, as specified in these specifications and the special provisions, and as directed by the Engineer.

SECTION 51: CONCRETE STRUCTURES

Issue Date: January 28, 2005

The eleventh paragraph in Section 51-1.05, "Forms," of the Standard Specifications is amended to read:

• Form panels for exposed surfaces shall be furnished and placed in uniform widths of not less than 0.9-m and in uniform lengths of not less than 1.8 m, except at the end of continuously formed surfaces where the final panel length required is less than 1.8 m. Where the width of the member formed is less than 0.9-m, the width of the panels shall be not less than the width of the member. Panels shall be arranged in symmetrical patterns conforming to the general lines of the structure. Except when otherwise provided herein or shown on the plans, panels for vertical surfaces shall be placed with the long dimension horizontal and with horizontal joints level and continuous. Form panels for curved surfaces of columns shall be continuous for a minimum of one quarter of the circumference, or 1.8 m. For walls with sloping footings which do not abut other walls, panels may be placed with the long dimension parallel to the footing. Form panels on each side of the panel joint shall be precisely aligned, by means of supports or fasteners common to both panels, to result in a continuous unbroken concrete plane surface. When prefabricated soffit panels are used, form filler panels joining prefabricated panels shall have a uniform minimum width of 0.3-m and shall produce a smooth uniform surface with consistent longitudinal joint lines between the prefabricated panels.

The first and second paragraph in Section 51-1.06A, "Falsework Design and Drawings," of the Standard Specifications are amended to read:

• The Contractor shall submit to the Engineer working drawings and design calculations for falsework proposed for use at bridges. For bridges where the height of any portion of the falsework, as measured from the ground line to the soffit of the superstructure, exceeds 4.25 m; or where any individual falsework clear span length exceeds 4.85 m; or where provision for vehicular, pedestrian, or railroad traffic through the falsework is made; the drawings shall be signed by an engineer who is registered as a Civil Engineer in the State of California. Six sets of the working drawings and 2 copies of the design calculations shall be furnished.

Additional working drawings and design calculations shall be submitted to the Engineer when specified in "Railroad Relations and Insurance" of the special provisions.

- The falsework drawings shall include details of the falsework erection and removal operations showing the methods and sequences of erection and removal and the equipment to be used. The details of the falsework erection and removal operations shall demonstrate the stability of all or any portions of the falsework during all stages of the erection and removal operations.

The seventh paragraph in Section 51-1.06A, "Falsework Design and Drawings," of the Standard Specifications is amended to read:

- In the event that several falsework plans are submitted simultaneously, or an additional plan is submitted for review before the review of a previously submitted plan has been completed, the Contractor shall designate the sequence in which the plans are to be reviewed. In such event, the time to be provided for the review of any plan in the sequence shall be not less than the review time specified above for that plan, plus 2 weeks for each plan of higher priority which is still under review. A falsework plan submittal shall consist of plans for a single bridge or portion thereof. For multi-frame bridges, each frame shall require a separate falsework plan submittal.

Section 51-1.06A, "Falsework Design and Drawings," of the Standard Specifications is amended by adding the following paragraphs:

- If structural composite lumber is proposed for use, the falsework drawings shall clearly identify the structural composite lumber members by grade (E value), species, and type. The Contractor shall provide technical data from the manufacturer showing the tabulated working stress values of the composite lumber. The Contractor shall furnish a certificate of compliance as specified in Section 6-1.07, "Certificates of Compliance," for each delivery of structural composite lumber to the project site.
- For falsework piles with a calculated loading capacity greater than 900 kN, the falsework piles shall be designed by an engineer who is registered as either a Civil Engineer or a Geotechnical Engineer in the State of California, and the calculations shall be submitted to the Engineer.

The first paragraph in Section 51-1.06A(1), "Design Loads," of the Standard Specifications is amended to read:

- The design load for falsework shall consist of the sum of dead and live vertical loads, and an assumed horizontal load. The minimum total design load for any falsework, including members that support walkways, shall be not less than 4800 N/m^2 for the combined live and dead load regardless of slab thickness.

The eighth paragraph in Section 51-1.06A(1), "Design Loads," of the Standard Specifications is amended to read:

- In addition to the minimum requirements specified in this Section 51-1.06A, falsework for box girder structures with internal falsework bracing systems using flexible members capable of withstanding tensile forces only, shall be designed to include the vertical effects caused by the elongation of the flexible member and the design horizontal load combined with the dead and live loads imposed by concrete placement for the girder stems and connected bottom slabs. Falsework comprised of individual steel towers with bracing systems using flexible members capable of withstanding tensile forces only to resist overturning, shall be exempt from these additional requirements.

The third paragraph in Section 51-1.06B, "Falsework Construction," of the Standard Specifications is amended to read:

- When falsework is supported on piles, the piles shall be driven and the actual nominal resistance assessed in conformance with the provisions in Section 49, "Piling."

Section 51-1.06B, "Falsework Construction," of the Standard Specifications is amended by adding the following paragraphs:

- For falsework piles with a calculated nominal resistance greater than 1800 kN, the Contractor shall conduct dynamic monitoring of pile driving and generate field acceptance criteria based on a wave equation analysis. These analyses shall be signed by an engineer who is registered as a Civil Engineer in the State of California and submitted to the Engineer prior to completion of falsework erection.

- Prior to the placement of falsework members above the stringers, the final bracing system for the falsework shall be installed.

Section 51-1.06C, "Removing Falsework," of the Standard Specifications is amended by adding the following paragraph:

- The falsework removal operation shall be conducted in such a manner that any portion of the falsework not yet removed remains in a stable condition at all times.

The sixth paragraph in Section 51-1.09, "Placing Concrete," of the Standard Specifications is amended to read:

- Vibrators used to consolidate concrete containing epoxy-coated bar reinforcement or epoxy-coated prestressing steel shall have a resilient covering to prevent damage to the epoxy-coating on the reinforcement or prestressing steel.

The third sentence of the fourth paragraph in Section 51-1.12D, "Sheet Packing, Preformed Pads and Board Fillers," of the Standard Specifications is amended to read:

Surfaces of expanded polystyrene against which concrete is placed shall be faced with hardboard.

Section 51-1.12F, "Sealed Joints," of the Standard Specifications is amended by adding the following paragraph:

- The opening of the joints at the time of placing shall be that shown on the plans adjusted for temperature. Care shall be taken to avoid impairment of the clearance in any manner.

The first paragraph in Section 51-1.12F, "Sealed Joints," of the Standard Specifications is amended to read:

- Where shown on the plans, joints in structures shall be sealed with joint seals, joint seal assemblies, or seismic joints in conformance with the details shown on the plans, the provisions in these specifications, and the special provisions.

The fourth paragraph in Section 51-1.12F, "Sealed Joints," of the Standard Specifications is amended to read:

• Joint seal assemblies and seismic joints shall consist of metal or metal and elastomeric assemblies which are anchored or cast into a recess in the concrete over the joint. Strip seal joint seal assemblies consist of only one joint cell. Modular unit joint seal assemblies consist of more than one joint cell.

The fifth paragraph in Section 51-1.12F, "Sealed Joints," of the Standard Specifications is amended to read:

• The Movement Rating (MR) shall be measured normal to the longitudinal axis of the joint. The type of seal to be used for the MR shown on the plans shall be as follows:

Movement Rating (MR)	Seal Type
MR ≤ 15 mm	Type A or Type B
15 mm < MR ≤ 30 mm	Type A (silicone only) or Type B
30 mm < MR ≤ 50 mm	Type B
50 mm < MR ≤ 100 mm	Joint Seal Assembly (Strip Seal)
MR > 100 mm	Joint Seal Assembly (Modular Unit) or Seismic Joint

The second paragraph in Section 51-1.12F(3)(b), "Type B Seal," of the Standard Specifications is amended to read:

• The preformed elastomeric joint seal shall conform to the requirements in ASTM Designation: D 2628 and the following:

A. The seal shall consist of a multi-channel, nonporous, homogeneous material furnished in a finished extruded form.
B. The minimum depth of the seal, measured at the contact surface, shall be at least 95 percent of the minimum uncompressed width of the seal as designated by the manufacturer.
C. When tested in conformance with the requirements in California Test 673 for Type B seals, joint seals shall provide a Movement Rating (MR) of not less than that shown on the plans.
D. The top and bottom edges of the joint seal shall maintain continuous contact with the sides of the groove over the entire range of joint movement.
E. The seal shall be furnished full length for each joint with no more than one shop splice in any 18-m length of seal.
F. The Contractor shall demonstrate the adequacy of the procedures to be used in the work before installing seals in the joints.
G. Shop splices and field splices shall have no visible offset of exterior surfaces, and shall show no evidence of bond failure.
H. At all open ends of the seal that would admit water or debris, each cell shall be filled to a depth of 80 mm with commercial quality open cell polyurethane foam, or closed by other means subject to approval by the Engineer.

Section 51-1.12F(3)(c), "Joint Seal Assemblies," of the Standard Specifications is amended to read:

(c) Joint Seal Assemblies and Seismic Joints

• Joint seal assemblies and seismic joints shall be furnished and installed in joints in bridge decks as shown on the plans and as specified in the special provisions.

The eighth paragraph in Section 51-1.12H(1), "Plain and Fabric Reinforced Elastomeric Bearing Pads," of the Standard Specifications is amended to read:

- The elastomer, as determined from test specimens, shall conform to the following:

Test	ASTM Designation	Requirement
Tensile strength, MPa	D 412	15.5 Min.
Elongation at break, percent	D 412	350 Min.
Compression set, 22 h at 70°C, percent	D 395 (Method B)	25 Max.
Tear strength, kN/m	D 624 (Die C)	31.5 Min.
Hardness (Type A)	D 2240 with 2 kg. mass	55 ±5
Ozone resistance 20% strain, 100 h at 40°C ±2°C	D 1149 (except 100 ±20 parts per 100 000 000)	No cracks
Instantaneous thermal stiffening at -40°C	D 1043	Shall not exceed 4 times the stiffness measured at 23°C
Low temperature brittleness at -40°C	D 746 (Procedure B)	Pass

The table in the ninth paragraph of Section 51-1.12H(1), "Plain and Fabric Reinforced Elastomeric Bearing Pads," of the Standard Specifications is amended to read:

Tensile strength, percent	-15
Elongation at break, percent	-40; but not less than 300% total elongation of the material
Hardness, points	+10

The first paragraph in Section 51-1.12H(2), "Steel Reinforced Elastomeric Bearings," of the Standard Specifications is amended to read:

- Steel reinforced elastomeric bearings shall conform to the requirements for steel-laminated elastomeric bearings in ASTM Designation: D 4014 and the following:

A. The bearings shall consist of alternating steel laminates and internal elastomer laminates with top and bottom elastomer covers. Steel laminates shall have a nominal thickness of 1.9 mm (14 gage). Internal elastomer laminates shall have a thickness of 12 mm, and top and bottom elastomer covers shall each have a thickness of 6 mm. The combined thickness of internal elastomer laminates and top and bottom elastomer covers shall be equal to the bearing pad thickness shown on the plans. The elastomer cover to the steel laminates at the sides of the bearing shall be 3 mm. If guide pins or other devices are used to control the side cover over the steel laminates, any exposed portions of the steel laminates shall be sealed by vulcanized patching. The length, width, or diameter of the bearings shall be as shown on the plans.
B. The total thickness of the bearings shall be equal to the thickness of elastomer laminates and covers plus the thickness of the steel laminates.
C. Elastomer for steel reinforced elastomeric bearings shall conform to the provisions for elastomer in Section 51-1.12H(1), "Plain and Fabric Reinforced Elastomeric Bearing Pads."
D. A Certificate of Compliance conforming to the provisions in Section 6-1.07, "Certificates of Compliance," shall be furnished to the Engineer certifying that the bearings to be furnished conform to all of the above provisions. The Certificate of Compliance shall be supported by a certified copy of the results of tests performed by the manufacturer on the bearings.

E. One sample bearing shall be furnished to the Engineer from each lot of bearings to be furnished for the contract. Samples shall be available at least 3 weeks in advance of intended use. The sample bearing shall be one of the following:

Bearing Pad Thickness as Shown on the Plans	Sample Bearing
≤ 50 mm	Smallest complete bearing shown on the plans
> 50 mm	* 57 ± 3 mm thick sample not less than 200 mm x 305 mm in plan and cut by the manufacturer from the center of one of the thickest complete bearings

* The sample bearing plus remnant parts of the complete bearing shall be furnished to the Engineer.

F. A test specimen taken from the sample furnished to the Engineer will be tested in conformance with the requirements in California Test 663. Specimens tested shall show no indication of loss of bond between the elastomer and steel laminates.

The fourth paragraph in Section 51-1.14, "Waterstops," of the Standard Specifications is amended to read:

• Neoprene shall be manufactured from a vulcanized elastomeric compound containing neoprene as the sole elastomer and shall conform to the following:

Test	ASTM Designation	Requirement
Tensile strength, MPa	D 412	13.8 Min.
Elongation at break, percent	D 412	300 Min.
Compression set, 22 h at 70°C, percent	D 395 (Method B)	30 Max.
Tear strength, kN/m	D 624 (Die C)	26.3 Min.
Hardness (Type A)	D 2240	55±5
Ozone resistance 20% strain, 100 h at 38°C ±1°C	D 1149 (except 100± 20 parts per 100 000 000)	No cracks
Low temperature brittleness at -40°C	D 746 (Procedure B)	Pass
Flame resistance	C 542	Must not propagate flame
Oil Swell, ASTM Oil #3, 70 h at 100°C, volume change, percent	D 471	80 Max.
Water absorption, immersed 7 days at 70°C, change in mass, percent	D 471	15 Max.

The first sentence of the fourth paragraph in Section 51-1.17, "Finish Bridge Decks," of the Standard Specifications is amended to read:

• The smoothness of completed roadway surfaces of structures, approach slabs and the adjacent 15 m of approach pavement, and the top surfaces of concrete decks which are to be covered with another material, will be tested by the Engineer with a bridge profilograph in conformance with the requirements in California Test 547 and the requirements herein.

Section 51-1.17, "Finishing Bridge Decks," of the Standard Specifications is amended by deleting the seventh, thirteenth and fourteenth paragraphs.

The fourteenth paragraph in Section 51-1.23, "Payment," of the Standard Specifications is amended by deleting "and injecting epoxy in cracks".

SECTION 52: REINFORCEMENT

Issue Date: June 30, 2006

The first paragraph in Section 52-1.02A, "Bar Reinforcement," of the Standard Specifications is amended to read:

• Reinforcing bars shall be low-alloy steel deformed bars conforming to the requirements in ASTM Designation: A 706/A 706M, except that deformed or plain billet-steel bars conforming to the requirements in ASTM Designation: A 615/A 615M, Grade 280 or 420, may be used as reinforcement in the following 5 categories:

A. Slope and channel paving,
B. Minor structures,
C. Sign and signal foundations (pile and spread footing types),
D. Roadside rest facilities, and
E. Concrete barrier Type 50 and Type 60 series and temporary railing.

The third paragraph in Section 52-1.04, "Inspection," of the Standard Specifications is amended to read:

• A Certificate of Compliance conforming to the provisions in Section 6-1.07, "Certificates of Compliance," shall also be furnished for each shipment of epoxy-coated bar reinforcement or wire reinforcement certifying that the coated reinforcement conforms to the requirements in ASTM Designation: A 775/A 775M or A 884/A 884M respectively, and the provisions in Section 52-1.02B, "Epoxy-coated Reinforcement." The Certificate of Compliance shall include all of the certifications specified in ASTM Designation: A 775/A 775M or A 884/A 884M respectively.

The third paragraph of Section 52-1.06, "Bending," of the Standard Specifications is amended to read:

• Hooks and bends shall conform to the provisions of the Building Code Requirements for Structural Concrete of the American Concrete Institute.

Section 52-1.07 "Placing," of the Standard Specifications is amended by deleting item C of the third paragraph.

The eleventh paragraph in Section 52-1.07, "Placing," of the Standard Specifications is amended to read:

• Attention is directed to the provisions in Section 7-1.09, "Public Safety." Whenever a portion of an assemblage of bar reinforcing steel that is not encased in concrete exceeds 6 m in height, the Contractor shall submit to the Engineer for approval, in accordance with the provisions in Section 5-1.02, "Plans and Working Drawings," working drawings and design calculations for the temporary support system to be used. The working drawings and design calculations shall be signed by an engineer who is registered as a Civil Engineer in the State of California. The temporary support system shall be designed to resist all expected loads and shall be adequate to prevent collapse or overturning of the assemblage. If the installation of forms or other work requires revisions to or temporary release of any portion of the temporary support system, the working drawings

shall show the support system to be used during each phase of construction. The minimum horizontal wind load to be applied to the bar reinforcing steel assemblage, or to a combined assemblage of reinforcing steel and forms, shall be the sum of the products of the wind impact area and the applicable wind pressure value for each height zone. The wind impact area is the total projected area of the cage normal to the direction of the applied wind. Wind pressure values shall be determined from the following table:

Height Zone (Meters above ground)	Wind Pressure Value (Pa)
0-9.0	960
9.1-15.0	1200
15.1-30.0	1440
Over 30	1675

Section 52-1.08 "Splicing," of the Standard Specifications is amended to read:

52-1.08 SPLICING

- Splices of reinforcing bars shall consist of lap splices, service splices, or ultimate butt splices.
- Splicing of reinforcing bars will not be permitted at a location designated on the plans as a "No-Splice Zone." At the option of the Contractor, reinforcing bars may be continuous at locations where splices are shown on the plans. The location of splices, except where shown on the plans, shall be determined by the Contractor using available commercial lengths where practicable.
- Unless otherwise shown on the plans, splices in adjacent reinforcing bars at any particular section shall be staggered. The minimum distance between staggered lap splices or mechanical lap splices shall be the same as the length required for a lap splice in the largest bar. The minimum distance between staggered butt splices shall be 600 mm, measured between the midpoints of the splices along a line which is centered between the axes of the adjacent bars.

52-1.08A Lap Splicing Requirements

- Splices made by lapping shall consist of placing reinforcing bars in contact and wiring them together, maintaining the alignment of the bars and the minimum clearances. Should the Contractor elect to use a butt welded or mechanical splice at a location not designated on the plans as requiring a service or ultimate butt splice, this splice shall conform to the testing requirements for service splice.
- Reinforcing bars shall not be spliced by lapping at locations where the concrete section is not sufficient to provide a minimum clear distance of 50 mm between the splice and the nearest adjacent bar. The clearance to the surface of the concrete specified in Section 52-1.07, "Placing," shall not be reduced.
- Reinforcing bars Nos. 43 and 57 shall not be spliced by lapping.
- Where ASTM Designations: A 615/A 615M, Grade 420 or A 706/A 706M reinforcing bars are required, the length of lap splices shall be as follows: Reinforcing bars No. 25 or smaller shall be lapped at least 45 diameters of the smaller bar joined; and reinforcing bars Nos. 29, 32, and 36 shall be lapped at least 60 diameters of the smaller bar joined, except when otherwise shown on the plans.
- Where ASTM Designation: A 615/A 615M, Grade 280 reinforcing bars are permitted, the length of lap splices shall be as follows: Reinforcing bars No. 25 or smaller shall be lapped at least 30 diameters of the smaller bar joined; and reinforcing bars Nos. 29, 32, and 36 shall be lapped at least 45 diameters of the smaller bar joined, except when otherwise shown on the plans.
- Splices in bundled bars shall conform to the following:

A In bundles of 2 bars, the length of the lap splice shall be the same as the length of a single bar lap splice.
B. In bundles of 3 bars, the length of the lap splice shall be 1.2 times the length of a single bar lap splice.

• Welded wire fabric shall be lapped such that the overlap between the outermost cross wires is not less than the larger of:

A. 150 mm,
B. The spacing of the cross wires plus 50 mm, or
C. The numerical value of the longitudinal wire size (MW-Size Number) times 370 divided by the spacing of the longitudinal wires in millimeters.

52-1.08B Service Splicing and Ultimate Butt Splicing Requirements

• Service splices and ultimate butt splices shall be either butt welded or mechanical splices, shall be used at the locations shown on the plans, and shall conform to the requirements of these specifications and the special provisions.

52-1.08B(1) Mechanical Splices

• Mechanical splices to be used in the work shall be on the Department's current prequalified list before use. The prequalified list can be obtained from the Department's internet site listed in the special provisions or by contacting the Transportation Laboratory directly.

• When tested in conformance with the requirements in California Test 670, the total slip shall not exceed the values listed in the following table:

Reinforcing Bar Number	Total Slip (μm)
13	250
16	250
19	250
22	350
25	350
29	350
32	450
36	450
43	600
57	750

• Slip requirements shall not apply to mechanical lap splices, splices that are welded, or splices that are used on hoops.

• Splicing procedures shall be in conformance with the manufacturer's recommendations, except as modified in this section. Splices shall be made using the manufacturer's standard equipment, jigs, clamps, and other required accessories.

• Splice devices shall have a clear coverage of not less than 40 mm measured from the surface of the concrete to the outside of the splice device. Stirrups, ties, and other reinforcement shall be adjusted or relocated, and additional reinforcement shall be placed, if necessary, to provide the specified clear coverage to reinforcement.

• The Contractor shall furnish the following information for each shipment of splice material in conformance with the provisions in Section 6-1.07, "Certificates of Compliance:"

A. The type or series identification of the splice material including tracking information for traceability.
B. The bar grade and size number to be spliced.
C. A copy of the manufacturer's product literature giving complete data on the splice material and installation procedures.

D. A statement that the splicing systems and materials used in conformance with the manufacturer's installation procedures will develop the required tensile strengths, based on the nominal bar area, and will conform to the total slip requirements and the other requirements in these specifications.
E. A statement that the splice material conforms to the type of mechanical splice in the Department's current prequalified list.

52-1.08B(2) Butt Welded Splices

- Except for resistance butt welds, butt welded splices of reinforcing bars shall be complete joint penetration butt welds conforming to the requirements in AWS D 1.4, and these specifications.
- Welders and welding procedures shall be qualified in conformance with the requirements in AWS D 1.4.
- Only the joint details and dimensions as shown in Figure 3.2, "Direct Butt Joints," of AWS D 1.4, shall be used for making complete joint penetration butt welds of bar reinforcement. Split pipe backing shall not be used.
- Butt welds shall be made with multiple weld passes using a stringer bead without an appreciable weaving motion. The maximum stringer bead width shall be 2.5 times the diameter of the electrode and slagging shall be performed between each weld pass. Weld reinforcement shall not exceed 4 mm in convexity.
- Electrodes used for welding shall meet the minimum Charpy V-notch impact requirement of 27°J at –20°C.
- For welding of bars conforming to the requirements of ASTM Designation: A 615/A 615M, Grade 280 or Grade 420, the requirements of Table 5.2, "Minimum Preheat and Interpass Temperatures," of AWS D 1.4 are superseded by the following:

The minimum preheat and interpass temperatures shall be 200°C for Grade 280 bars and 300°C for Grade 420 bars. Immediately after completing the welding, at least 150 mm of the bar on each side of the splice shall be covered by an insulated wrapping to control the rate of cooling. The insulated wrapping shall remain in place until the bar has cooled below 90°C.

- When welding different grades of reinforcing bars, the electrode shall conform to Grade 280 bar requirements and the preheat shall conform to the Grade 420 bar requirements.
- In the event that any of the specified preheat, interpass, and post weld cooling temperatures are not met, all weld and heat affected zone metal shall be removed and the splice rewelded.
- Welding shall be protected from air currents, drafts, and precipitation to prevent loss of heat or loss of arc shielding. The method of protecting the welding area from loss of heat or loss of arc shielding shall be subject to approval by the Engineer.
- Reinforcing bars shall not be direct butt spliced by thermite welding.
- Procedures to be used in making welded splices in reinforcing bars, and welders employed to make splices in reinforcing bars, shall be qualified by tests performed by the Contractor on sample splices of the type to be used, before making splices to be used in the work.

52-1.08B(3) Resistance Butt Welds

- Shop produced resistance butt welds shall be produced by a fabricator who is approved by the Transportation Laboratory. The list of approved fabricators can be obtained from the Department’s internet site or by contacting the Transportation Laboratory directly.
- Before manufacturing hoops using resistance butt welding, the Contractor shall submit to the Engineer the manufacturer's Quality Control (QC) manual for the fabrication of hoops. As a minimum, the QC manual shall include the following:

A. The pre-production procedures for the qualification of material and equipment.
B. The methods and frequencies for performing QC procedures during production.

C. The calibration procedures and calibration frequency for all equipment.
D. The welding procedure specification (WPS) for resistance welding.
E. The method for identifying and tracking lots.

52-1.08C Service Splice and Ultimate Butt Splice Testing Requirements

- The Contractor shall designate in writing a splicing Quality Control Manager (QCM). The QCM shall be responsible directly to the Contractor for 1) the quality of all service and ultimate butt splicing including the inspection of materials and workmanship performed by the Contractor and all subcontractors; and 2) submitting, receiving, and approving all correspondence, required submittals, and reports regarding service and ultimate splicing to and from the Engineer.
- The QCM shall not be employed or compensated by any subcontractor, or by other persons or entities hired by subcontractors, who will provide other services or materials for the project. The QCM may be an employee of the Contractor.
- Testing on prequalification and production sample splices shall be performed at the Contractor's expense, at an independent qualified testing laboratory. The laboratory shall not be employed or compensated by any subcontractor, or by other persons or entities hired by subcontractors who will provide other services or materials for the project, and shall have the following:

A. Proper facilities, including a tensile testing machine capable of breaking the largest size of reinforcing bar to be tested with minimum lengths as shown in this section.
B. A device for measuring the total slip of the reinforcing bars across the splice to the nearest 25 µm, that, when placed parallel to the longitudinal axis of the bar is able to simultaneously measure movement across the splice at 2 locations 180 degrees apart.
C. Operators who have received formal training for performing the testing requirements of ASTM Designation: A 370 and California Test 670.
D. A record of annual calibration of testing equipment performed by an independent third party that has 1) standards that are traceable to the National Institute of Standards and Technology, and 2) a formal reporting procedure, including published test forms.

- The Contractor shall provide samples for quality assurance testing in conformance with the provisions in these specifications and the special provisions.
- Prequalification and production sample splices shall be 1) a minimum length of 1.5 meters for reinforcing bars No. 25 or smaller, and 2 meters for reinforcing bars No. 29 or larger, with the splice located at mid-point; and 2) suitably identified before shipment with weatherproof markings that do not interfere with the Engineer's tamper-proof markings or seals. Splices that show signs of tampering will be rejected.
- Shorter length sample splice bars may be furnished if approved in writing by the Engineer.
- The Contractor shall ensure that sample splices are properly secured and transported to the testing laboratory in such a manner that no alterations to the physical conditions occur during transportation. Sample splices shall be tested in the same condition as received. No modifications to the sample splices shall be made before testing.
- Each set or sample splice, as defined herein, shall be identified as representing either a prequalification or production test sample splice.
- For the purpose of production testing, a lot of either service splices or ultimate butt splices is defined as 1) 150, or fraction thereof, of the same type of mechanical splices used for each bar size and each bar deformation pattern that is used in the work, or 2) 150, or fraction thereof, of complete joint penetration butt welded splices or resistance butt welded splices for each bar size used in the work. If different diameters of hoop reinforcement are shown on the plans, separate lots shall be used for each different hoop diameter.
- Whenever a lot of splices is rejected, the rejected lot and subsequent lots of splices shall not be used in the work until 1) the QCM performs a complete review of the Contractor's quality control process for these

splices, 2) a written report is submitted to the Engineer describing the cause of failure for the splices in this lot and provisions for preventing similar failures in future lots, and 3) the Engineer has provided the Contractor with written notification that the report is acceptable. The Engineer shall have 3 working days after receipt of the report to provide notification to the Contractor. In the event the Engineer fails to provide notification within the time allowed, and if, in the opinion of the Engineer, completion of the work is delayed or interfered with by reason of the Engineer's delay in providing notification, the Contractor will be compensated for any resulting loss, and an extension of time will be granted in the same manner as provided for in Section 8-1.09, "Right of Way Delays."

52-1.08C(1) Splice Prequalification Report

- Before using any service splices or ultimate butt splices in the work, the Contractor shall submit a Splice Prequalification Report. The report shall include splice material information, names of the operators who will be performing the splicing, and descriptions of the positions, locations, equipment, and procedures that will be used in the work.
- The Splice Prequalification Report shall also include certifications from the fabricator for prequalifications of operators and procedures based on sample tests performed no more than 2 years before submitting the report. Each operator shall be certified by performing 2 sample splices for each bar size of each splice type that the operator will be performing in the work. For deformation-dependent types of splice devices, each operator shall be certified by performing 2 additional samples for each bar size and deformation pattern that will be used in the work.
- Prequalification sample splices shall be tested by an independent qualified testing laboratory and shall conform to the appropriate production test criteria and slip requirements specified herein. When epoxy-coated reinforcement is required, resistance butt welded sample splices shall have the weld flash removed by the same procedure as will be used in the work, before coating and testing. The Splice Prequalification Report shall include the certified test results for all prequalification sample splices.
- The QCM shall review and approve the Splice Prequalification Report before submitting it to the Engineer for approval. The Contractor shall allow 2 weeks for the review and approval of a complete report before performing any service splicing or ultimate butt splicing in the work. In the event the Engineer fails to complete the review within the time allowed, and in the opinion of the Engineer, completion of the work is delayed or interfered with by reason of the Engineer's delay in completing the review, the Contractor will be compensated for any resulting loss, and an extension of time will be granted, in the same manner as provided for in Section 8-1.09, "Right of Way Delays."

52-1.08C(2) Service Splice Test Criteria

- Service production and quality assurance sample splices shall be tensile tested in conformance with the requirements in ASTM Designation: A 370 and California Test 670 and shall develop a minimum tensile strength of not less than 550 MPa.

52-1.08C(2)(a) Production Test Requirements for Service Splices

- Production tests shall be performed by the Contractor's independent laboratory for all service splices used in the work. A production test shall consist of testing 4 sample splices prepared for each lot of completed splices. The samples shall be prepared by the Contractor using the same splice material, position, operators, location, and equipment, and following the same procedure as used in the work.
- At least one week before testing, the Contractor shall notify the Engineer in writing of the date when and the location where the testing of the samples will be performed.
- The 4 samples from each production test shall be securely bundled together and identified with a completed sample identification card before shipment to the independent laboratory. The card will be furnished by the Engineer. Bundles of samples containing fewer than 4 samples of splices shall not be tested.

- Before performing any tensile tests on production test sample splices, one of the 4 samples shall be tested for, and shall conform to, the requirements for total slip. Should this sample not meet the total slip requirements, one retest, in which the 3 remaining samples are tested for total slip, will be allowed. Should any of the 3 remaining samples not conform to the total slip requirements, all splices in the lot represented by this production test will be rejected.
- If 3 or more sample splices from a production test conform to the provisions in this Section 52-1.08C(2),"Service Splice Test Criteria," all splices in the lot represented by this production test will be considered acceptable, provided each of the 4 samples develop a minimum tensile strength of not less than 420 MPa.
- Should only 2 sample splices from a production test conform to the provisions in this Section 52-1.08C(2), "Service Splice Test Criteria," one additional production test shall be performed on the same lot of splices. This additional production test shall consist of testing 4 samples splices that have been randomly selected by the Engineer and removed by the Contractor from the actual completed lot of splices. Should any of the 4 splices from this additional test fail to conform to these provisions, all splices in the lot represented by these production tests will be rejected.
- If only one sample splice from a production test conforms to the provisions in this Section 52-1.08C(2), "Service Splice Test Criteria," all splices in the lot represented by this production test will be rejected.
- If a production test for a lot fails, the Contractor shall repair or replace all reinforcing bars from which sample splices were removed before the Engineer selects additional splices from this lot for further testing.

52-1.08C(2)(b) Quality Assurance Test Requirements for Service Splices

- For the first production test performed, and for at least one, randomly selected by the Engineer, of every 5 subsequent production tests, or portion thereof, the Contractor shall concurrently prepare 4 additional service quality assurance sample splices. These service quality assurance sample splices shall be prepared in the same manner as specified herein for service production sample splices.
- These 4 additional quality assurance sample splices shall be shipped to the Transportation Laboratory for quality assurance testing. The 4 sample splices shall be securely bundled together and identified by location and contract number with weatherproof markings before shipment. Bundles containing fewer than 4 samples of splices will not be tested. Sample splices not accompanied by the supporting documentation required in Section 52-1.08B(1), for mechanical splices, or in Section 52-1.08B(3), for resistance butt welds, will not be tested.
- Quality assurance testing will be performed in conformance with the requirements for service production sample splices in Section 52-1.08C(2)(a), "Production Test Requirements for Service Splices."

52-1.08C(3) Ultimate Butt Splice Test Criteria

- Ultimate production and quality assurance sample splices shall be tensile tested in conformance with the requirements described in ASTM Designation: A 370 and California Test 670.
- A minimum of one control bar shall be removed from the same bar as, and adjacent to, all ultimate prequalification, production, and quality assurance sample splices. Control bars shall be 1) a minimum length of one meter for reinforcing bars No. 25 or smaller and 1.5 meters for reinforcing bars No. 29 or larger, and 2) suitably identified before shipment with weatherproof markings that do not interfere with the Engineer's tamper-proof markings or seals. The portion of adjacent bar remaining in the work shall also be identified with weatherproof markings that correspond to its adjacent control bar.
- Each sample splice and its associated control bar shall be identified and marked as a set. Each set shall be identified as representing a prequalification, production, or quality assurance sample splice.
- The portion of hoop reinforcing bar, removed to obtain a sample splice and control bar, shall be replaced using a prequalified ultimate mechanical butt splice, or the hoop shall be replaced in kind.
- Reinforcing bars, other than hoops, from which sample splices are removed, shall be repaired using ultimate mechanical butt splices conforming to the provisions in Section 52-1.08C(1), "Splice Prequalification

Report," or the bars shall be replaced in kind. These bars shall be repaired or replaced such that no splices are located in any "No Splice Zone" shown on the plans.

- Ultimate production and quality assurance sample splices shall rupture in the reinforcing bar either: 1) outside of the affected zone or 2) within the affected zone, provided that the sample splice has achieved at least 95 percent of the ultimate tensile strength of the control bar associated with the sample splice. In addition, necking of the bar, as defined in California Test 670, shall be evident at rupture regardless of whether the bar breaks inside or outside the affected zone.
- The affected zone is the portion of the reinforcing bar where any properties of the bar, including the physical, metallurgical, or material characteristics, have been altered by fabrication or installation of the splice.
- The ultimate tensile strength shall be determined for all control bars by tensile testing the bars to rupture, regardless of where each sample splice ruptures. If 2 control bars are tested for one sample splice, the bar with the lower ultimate tensile strength shall be considered the control bar.

52-1.08C(3)(a) Production Test Requirements for Ultimate Butt Splices

- Production tests shall be performed for all ultimate butt splices used in the work. A production test shall consist of testing 4 sets of sample splices and control bars removed from each lot of completed splices, except when quality assurance tests are performed.
- After the splices in a lot have been completed, and the bars have been epoxy-coated when required, the QCM shall notify the Engineer in writing that the splices in this lot conform to the specifications and are ready for testing. Except for hoops, sample splices will be selected by the Engineer at the job site. Sample splices for hoops will be selected by the Engineer either at the job site or a fabrication facility.
- After notification has been received, the Engineer will randomly select the 4 sample splices to be removed from the lot and place tamper-proof markings or seals on them. The Contractor shall select the adjacent control bar for each sample splice bar, and the Engineer will place tamper-proof markings or seals on them. These ultimate production sample splices and control bars shall be removed by the Contractor, and tested by an independent qualified testing laboratory.
- At least one week before testing, the Contractor shall notify the Engineer in writing of the date when and the location where the testing of the samples will be performed.
- A sample splice or control bar from any set will be rejected if a tamper-proof marking or seal is disturbed before testing.
- The 4 sets from each production test shall be securely bundled together and identified with a completed sample identification card before shipment to the independent laboratory. The card will be furnished by the Engineer. Bundles of samples containing fewer than 4 sets of splices shall not be tested.
- Before performing any tensile tests on production test sample splices, one of the 4 sample splices shall be tested for, and shall conform to, the requirements for total slip. Should this sample splice not meet these requirements, one retest, in which the 3 remaining sample splices are tested for total slip, will be allowed. Should any of the 3 remaining sample splices not conform to these requirements, all splices in the lot represented by this production test will be rejected.
- If 3 or more sample splices from a production test conform to the provisions in Section 52-1.08C(3), "Ultimate Butt Splice Test Criteria," all splices in the lot represented by this production test will be considered acceptable.
- Should only 2 sample splices from a production test conform to the provisions in Section 52-1.08C(3), "Ultimate Butt Splice Test Criteria," one additional production test shall be performed on the same lot of splices. Should any of the 4 sample splices from this additional test fail to conform to these provisions, all splices in the lot represented by these production tests will be rejected.
- If only one sample splice from a production test conforms to the provisions in Section 52-1.08C(3), "Ultimate Butt Splice Test Criteria," all splices in the lot represented by this production test will be rejected.

- If a production test for a lot fails, the Contractor shall repair or replace all reinforcing bars from which sample splices were removed, complete in place, before the Engineer selects additional splices from this lot for further testing.
- Production tests will not be required on repaired splices from a lot, regardless of the type of prequalified ultimate mechanical butt splice used to make the repair. However, should an additional production test be required, the Engineer may select any repaired splice for the additional production test.

52-1.08C(3)(b) Quality Assurance Test Requirements for Ultimate Butt Splices

- For the first production test performed, and for at least one, randomly selected by the Engineer, of every 5 subsequent production tests, or portion thereof, the Contractor shall concurrently prepare 4 additional ultimate quality assurance sample splices along with associated control bars.
- Each time 4 additional ultimate quality assurance sample splices are prepared, 2 of these quality assurance sample splice and associated control bar sets and 2 of the production sample splice and associated control bar sets, together, shall conform to the requirements for ultimate production sample splices in Section 52-1.08C(3)(a),"Production Test Requirements for Ultimate Butt Splices."
- The 2 remaining quality assurance sample splice and associated control bar sets, along with the 2 remaining production sample splice and associated control bar sets shall be shipped to the Transportation Laboratory for quality assurance testing. The 4 sets shall be securely bundled together and identified by location and contract number with weatherproof markings before shipment. Bundles containing fewer than 4 sets will not be tested.
- Quality assurance testing will be performed in conformance with the requirements for ultimate production sample splices in Section 52-1.08C(3)(a), "Production Test Requirements for Ultimate Butt Splices."

52-1.08C(3)(c) Nondestructive Splice Tests

- When the specifications allow for welded sample splices to be taken from other than the completed lot of splices, the Contractor shall meet the following additional requirements.
- Except for resistance butt welded splices, radiographic examinations shall be performed on 25 percent of all complete joint penetration butt welded splices from a production lot. The size of a production lot will be a maximum of 150 splices. The Engineer will select the splices which will compose the production lot and also the splices within each production lot to be radiographically examined.
- All required radiographic examinations of complete joint penetration butt welded splices shall be performed by the Contractor in conformance with the requirements in AWS D 1.4 and these specifications.
- Before radiographic examination, welds shall conform to the requirements in Section 4.4, "Quality of Welds," of AWS D 1.4.
- Should more than 12 percent of the splices which have been radiographically examined in any production lot be defective, an additional 25 percent of the splices, selected by the Engineer from the same production lot, shall be radiographically examined. Should more than 12 percent of the cumulative total of splices tested from the same production lot be defective, all remaining splices in the lot shall be radiographically examined.
- Additional radiographic examinations performed due to the identification of defective splices shall be at the Contractor's expense.
- All defects shall be repaired in conformance with the requirements in AWS D 1.4.
- The Contractor shall notify the Engineer in writing 48 hours before performing any radiographic examinations.
- The radiographic procedure used shall conform to the requirements in AWS D1.1, AWS D1.4, and the following:

Two exposures shall be made for each complete joint penetration butt welded splice. For each of the 2 exposures, the radiation source shall be centered on each bar to be radiographed. The first exposure shall

be made with the radiation source placed at zero degrees from the top of the weld and perpendicular to the weld root and identified with a station mark of "0." The second exposure shall be at 90 degrees to the "0" station mark and shall be identified with a station mark of "90." When obstructions prevent a 90 degree placement of the radiation source for the second exposure, and when approved in writing by the Engineer, the source may be rotated, around the centerline of the reinforcing bar, a maximum of 25 degrees.

For field produced complete joint penetration butt welds, no more than one weld shall be radiographed during one exposure. For shop produced complete joint penetration butt welds, if more than one weld is to be radiographed during one exposure, the angle between the root line of each weld and the direction to the radiation source shall be not less than 65 degrees.

Radiographs shall be made by either X-ray or gamma ray. Radiographs made by X-ray or gamma rays shall have densities of not less than 2.3 nor more than 3.5 in the area of interest. A tolerance of 0.05 in density is allowed for densitometer variations. Gamma rays shall be from the iridium 192 isotope and the emitting specimen shall not exceed 4.45 mm in the greatest diagonal dimension.

The radiographic film shall be placed perpendicular to the radiation source at all times; parallel to the root line of the weld unless source placement determines that the film must be turned; and as close to the root of the weld as possible.

The minimum source to film distance shall be maintained so as to ensure that all radiographs maintain a maximum geometric unsharpness of 0.020 at all times, regardless of the size of the reinforcing bars.

Penetrameters shall be placed on the source side of the bar and perpendicular to the radiation source at all times. One penetrameter shall be placed in the center of each bar to be radiographed, perpendicular to the weld root, and adjacent to the weld. Penetrameter images shall not appear in the weld area.

When radiography of more than one weld is being performed per exposure, each exposure shall have a minimum of one penetrameter per bar, or 3 penetrameters per exposure. When 3 penetrameters per exposure are used, one penetrameter shall be placed on each of the 2 outermost bars of the exposure, and the remaining penetrameter shall be placed on a centrally located bar.

An allowable weld buildup of 4 mm may be added to the total material thickness when determining the proper penetrameter selection. No image quality indicator equivalency will be accepted. Wire penetrameters or penetrameter blocks shall not be used.

Penetrameters shall be sufficiently shimmed using a radiographically identical material. Penetrameter image densities shall be a minimum of 2.0 and a maximum of 3.6.

Radiographic film shall be Class 1, regardless of the size of reinforcing bars.

Radiographs shall be free of film artifacts and processing defects, including, but not limited to, streaks, scratches, pressure marks or marks made for the purpose of identifying film or welding indications.

Each splice shall be clearly identified on each radiograph and the radiograph identification and marking system shall be established between the Contractor and the Engineer before radiographic inspection begins. Film shall be identified by lead numbers only; etching, flashing or writing in identifications of any type will not be permitted. Each piece of film identification information shall be legible and shall include, as a minimum, the following information: Contractor's name, date, name of nondestructive testing firm, initials of radiographer, contract number, part number and weld number. The letter "R" and repair number shall be placed directly after the weld number to designate a radiograph of a repaired weld.

Radiographic film shall be developed within a time range of one minute less to one minute more than the film manufacturer's recommended maximum development time. Sight development will not be allowed.

Processing chemistry shall be done with a consistent mixture and quality, and processing rinses and tanks shall be clean to ensure proper results. Records of all developing processes and any chemical changes to the developing processes shall be kept and furnished to the Engineer upon request. The Engineer may request, at any time, that a sheet of unexposed film be processed in the presence of the Engineer to verify processing chemical and rinse quality.

The results of all radiographic interpretations shall be recorded on a signed certification and a copy kept with the film packet.

Technique sheets prepared in conformance with the requirements in ASME Boiler and Pressure Vessels Code, Section V, Article 2 Section T-291 shall also contain the developer temperature, developing time, fixing duration and all rinse times.

52-1.08D Reporting Test Results

• A Production Test Report for all testing performed on each lot shall be prepared by the independent testing laboratory performing the testing and submitted to the QCM for review and approval. The report shall be signed by an engineer who represents the laboratory and is registered as a Civil Engineer in the State of California. The report shall include, as a minimum, the following information for each test: contract number, bridge number, lot number and location, bar size, type of splice, length of mechanical splice, length of test specimen, physical condition of test sample splice and any associated control bar, any notable defects, total measured slip, ultimate tensile strength of each splice, and for ultimate butt splices, limits of affected zone, location of visible necking area, ultimate tensile strength and 95 percent of this ultimate tensile strength for each control bar, and a comparison between 95 percent of the ultimate tensile strength of each control bar and the ultimate tensile strength of its associated splice.

• The QCM must review, approve, and forward each Production Test Report to the Engineer for review before the splices represented by the report are encased in concrete. The Engineer will have 3 working days to review each Production Test Report and respond in writing after a complete report has been received. Should the Contractor elect to encase any splices before receiving notification from the Engineer, it is expressly understood that the Contractor will not be relieved of the responsibility for incorporating material in the work that conforms to the requirements of the plans and specifications. Material not conforming to these requirements will be subject to rejection. Should the Contractor elect to wait to encase splices pending notification by the Engineer, and in the event the Engineer fails to complete the review and provide notification within the time allowed, and if, in the opinion of the Engineer, the work is delayed or interfered with by reason of the Engineer's delay in completing the review, the Contractor will be compensated for any resulting loss, and an extension of time will be granted, in the same manner as provided for in Section 8-1.09, "Right of Way Delays."

• Quality assurance test results for each bundle of 4 sets or 4 samples of splices will be reported in writing to the Contractor within 3 working days after receipt of the bundle by the Transportation Laboratory. In the event that more than one bundle is received on the same day, 2 additional working days shall be allowed for providing test results for each additional bundle received. A test report will be made for each bundle received. Should the Contractor elect to encase splices before receiving notification from the Engineer, it is expressly understood that the Contractor will not be relieved of the responsibility for incorporating material in the work that conforms to the requirements of the plans and specifications. Material not conforming to these requirements will be subject to rejection. Should the Contractor elect to wait to encase splices pending notification by the Engineer, and in the event the Engineer fails to complete the review within the time allowed, and in the opinion of the Engineer, completion of the work is delayed or interfered with by reason of the Engineer's delay in completing the review, the Contractor will be compensated for any resulting loss, and an extension of time will be granted, in the same manner as provided for in Section 8-1.09, "Right of Way Delays."

Section 52-1.11, "Payment," of the Standard Specifications is amended by adding the following paragraph after the seventh paragraph:

• If a portion or all of the reinforcing steel is epoxy-coated more than 480 air line kilometers from both Sacramento and Los Angeles, additional shop inspection expenses will be sustained by the State. Whereas it is and will be impracticable and extremely difficult to ascertain and determine the actual increase in these expenses, it is agreed that payment to the Contractor for furnishing the epoxy-coated reinforcement will be reduced $5000 for each epoxy-coating facility located more than 480 air line kilometers from both Sacramento

and Los Angeles and an additional $3000 ($8000 total) for each epoxy-coating facility located more than 4800 air line kilometers from both Sacramento and Los Angeles.

SECTION 55: STEEL STRUCTURES

Issue Date: July 21, 2006

The third and fourth paragraphs of Section 55-1.01, "Description," of the Standard Specifications are amended to read:

- Details of connections for highway bridges selected for use by the Contractor shall conform to the AASHTO LRFD Bridge Design Specifications with Caltrans Amendments.
- Details of design selected by the Contractor, fabrication and workmanship, for steel railway bridges shall conform to the requirements of the Specifications for Steel Railway Bridges, for Fixed Spans Not Exceeding 400 Feet in Length of the AREMA, as set forth in the special provisions.

The third paragraph of Section 55-1.05, "Falsework," of the Standard Specifications is amended to read:

- Construction methods and equipment employed by the Contractor shall conform to the provisions in Section 7-1.02, "Load Limitations." Loads imposed on existing, new or partially completed structures shall not exceed the load carrying capacity of the structure, or portion of structure, as determined by the AASHTO LRFD Bridge Design Specifications with Caltrans Amendments.

The fourth and fifth paragraphs of Section 55-2.01, "Description," of the Standard Specifications are amended to read:

- All structural steel plate used for the fabrication of tension members, tension flanges, eyebars and hanger plates and for splice plates of tension members, tension flanges and eyebars shall meet the longitudinal Charpy V-notch impact value requirements specified herein. Sampling procedures shall conform to the requirements in ASTM Designation: A 673. The H (Heat) frequency of testing shall be used for structural steels conforming to the requirements in ASTM Designations: A 709/A 709M, Grades 36 [250], 50 [345], 50W [345W], and HPS 50W [345W]. The P (Piece) frequency of testing shall be used for structural steel conforming to the requirements in ASTM Designation: A 709/A 709M, Grades HPS 70W [485W], 100 [690], and 100W [690W]. Charpy V-notch impact values shall be determined in conformance with the requirements in ASTM Designation: E 23.

- Charpy V-notch (CVN) impact values shall conform to the following minimum values for non fracture critical members:

Material Conforming to ASTM Designation: A 709/A 709M	CVN Impact Value (Joules at Temp.)
Grade 36 [250]	20 at 4°C
Grade 50 [345]* (50 mm and under in thickness)	20 at 4°C
Grade 50W [345W]* (50 mm and under in thickness)	20 at 4°C
Grade 50 [345]* (Over 50 mm to 100 mm in thickness)	27 at 4°C
Grade 50W [345W]* (Over 50 mm to 100 mm in thickness)	27 at 4°C
Grade HPS 50W [345W]* (100 mm and under in thickness)	27 at -12°C
Grade HPS 70W [485]* (100 mm and under in thickness)	34 at -23°C
Grade 100 [490] (65 mm and under in thickness)	34 at -18°C
Grade 100W [490W] (Over 65 mm to 100 mm in thickness)	48 at -18°C

* If the yield point of the material exceeds 450 MPa, the temperature for the CVN impact value for acceptability shall be reduced 8°C for each increment of 70 MPa above 450 MPa.

Structural Steel Materials

Material	Specification
Structural steel:	
Carbon steel	ASTM: A 709/A 709M, Grade 36 [250] or {A 36/A 36M}a
High strength low alloy columbium vanadium steel	ASTM: A 709/A 709M, Grade 50 [345]or {A 572/A 572M, Grade 50 [345]}a
High strength low alloy structural steel	ASTM: A 709/A 709M, Grade 50W [345W], Grade HPS 50W [HSP 345W], or {A 588/A 588M}a
High strength low alloy structural steel plate	ASTM: A 709/A 709M, Grade HPS 70W [HPS 485W]
High-yield strength, quenched and tempered alloy steel plate suitable for welding	ASTM: A 709/A 709M, Grade 100 [690] and Grade 100W [690W], or {A 514/A 514M}a
Steel fastener components for general applications:	
Bolts and studs	ASTM: A 307
Headed anchor bolts	ASTM: A 307, Grade B, including S1 supplementary requirements
Nonheaded anchor bolts	ASTM: A 307, Grade C, including S1 supplementary requirements and S1.6 of AASHTO: M 314 supplementary requirements or AASHTO: M 314, Grade 36 or 55, including S1 supplementary requirements
High-strength bolts and studs	ASTM: A 449, Type 1
High-strength threaded rods	ASTM: A 449, Type 1
High-strength nonheaded anchor bolts	ASTM: A 449, Type 1
Nuts	ASTM: A 563, including Appendix X1b
Washers	ASTM: F 844

Components of high-strength steel fastener assemblies for use in structural steel joints:	
Bolts	ASTM: A 325, Type 1
Tension control bolts	ASTM: F 1852, Type 1
Nuts	ASTM: A 563, including Appendix X1b
Hardened washers	ASTM : F 436, Type 1, Circular, including S1 supplementary requirements
Direct tension indicators	ASTM: F 959, Type 325, zinc-coated
Carbon steel for forgings, pins and rollers	ASTM: A 668/A 668M, Class D
Alloy steel for forgings	ASTM: A 668/A 668M, Class G
Pin nuts	ASTM: A 36/A 36M
Carbon-steel castings	ASTM: A 27/A 27M, Grade 65-35, Class 1
Malleable iron castings	ASTM: A 47, Grade 32510 or A 47M, Grade 22010
Gray iron castings	ASTM: A 48, Class 30B
Carbon steel structural tubing	ASTM: A 500, Grade B or A 501
Steel pipe (Hydrostatic testing will not apply)	ASTM: A 53, Type E or S, Grade B; A 106, Grade B; or A 139, Grade B
Stud connectors	ASTM: A 108 and AASHTO/AWS D1.5

a Grades that may be substituted for the equivalent ASTM Designation: A 709 steel, at the Contractor's option, subject to the modifications and additions specified and to the requirements of A 709.

b Zinc-coated nuts that will be tightened beyond snug or wrench tight shall be furnished with a dry lubricant conforming to Supplementary Requirement S2 in ASTM Designation: A 563.

The first sentence of the first paragraph of Section 55-2.02, " Structural Steel," of the Standard Specifications is amended to read:

- Unless otherwise specified or shown on the plans, all structural steel plates, shapes, and bars shall conform to ASTM Designation: A 709/A 709M, Grade 50 [345].

Section 55-3.14, "Bolted Connections," of the Standard Specifications is amended by adding the following after the ninth paragraph:

- If a torque multiplier is used in conjunction with a calibrated wrench as a method for tightening fastener assemblies to the required tension, both the multiplier and the wrench shall be calibrated together as a system. The same length input and output sockets and extensions that will be used in the work shall also be included in the calibration of the system. The manufacturer's torque multiplication ratio shall be adjusted during calibration of the system, such that when this adjusted ratio is multiplied by the actual input calibrated wrench reading, the product is a calculated output torque that is within 2 percent of the true output torque. When this system is used in the work to perform any installation tension testing, rotational capacity testing, fastener tightening, or tension verification, it shall be used, intact as calibrated.

The second paragraph of Section 55-3.17, "Welding," of the Standard Specifications is amended to read:

- The minimum size of all fillet welds, except those to reinforce groove welds, shall be as shown in the following table:

Base Metal Thickness of the Thicker Part Joined (Millimeters)	*Minimum Size of Fillet Weld (Millimeters)
To 19 inclusive	6
Over 19	8

* Except that the weld size need not exceed the thickness of the thinner part joined.

The third paragraph of Section 55-3.19, "Bearings and Anchorages," is amended to read:

• Immediately before setting bearing assemblies or masonry plates directly on ground concrete surfaces, the Contractor shall thoroughly clean the surfaces of the concrete and the metal to be in contact and shall apply a coating of polysulfide or polyurethane caulking conforming to the requirements in ASTM Designation: C 920, Type S, Grade NS, Class 25, Use M, to contact areas to provide full bedding.

The sixth paragraph of Section 55-4.02, "Payment," of the Standard Specifications is amended to read:

• If a portion or all of the structural steel is fabricated more than 480 air line kilometers from both Sacramento and Los Angeles, additional shop inspection expenses will be sustained by the State. Whereas it is and will be impracticable and extremely difficult to ascertain and determine the actual increase in these expenses, it is agreed that payment to the Contractor for furnishing the structural steel from each fabrication site located more than 480 air line kilometers from both Sacramento and Los Angeles will be reduced $5000 or by an amount computed at $0.044 per kilogram of structural steel fabricated, whichever is greater, or in the case of each fabrication site located more than 4800 air line kilometers from both Sacramento and Los Angeles, payment will be reduced $8000 or by $0.079 per kilogram of structural steel fabricated, whichever is greater.

SECTION 56: SIGNS

Issue Date: November 2, 2004

Section 56-1.01, "Description," of the Standard Specifications is amended by deleting the third paragraph.

Section 56-1.02A, "Bars, Plates and Shapes," of the Standard Specifications is amended to read:

56-1.02A Bars, Plates, Shapes, and Structural Tubing

• Bars, plates, and shapes shall be structural steel conforming to the requirements in ASTM Designation: A 36/A 36M, except, at the option of the Contractor, the light fixture mounting channel shall be continuous-slot steel channel conforming to the requirements in ASTM Designation: A 1011/A 1011M, Designation SS, Grade 33[230], or aluminum Alloy 6063-T6 extruded aluminum conforming to the requirements in ASTM Designation: B 221 or B 221M.

• Structural tubing shall be structural steel conforming to the requirements in ASTM Designation: A 500, Grade B.

• Removable sign panel frames shall be constructed of structural steel conforming to the requirements in ASTM Designation: A 36/A 36M.

Section 56-1.02B, "Sheets," of the Standard Specifications is amended to read:

56-1.02B Sheets

• Sheets shall be carbon-steel sheets conforming to the requirements in ASTM Designation: A 1011/A 1011M, Designation SS, Grade 33[230].

• Ribbed sheet metal for box beam-closed truss sign structures shall be fabricated from galvanized sheet steel conforming to the requirements in ASTM Designation: A 653/A 653M, Designation SS, Grade 33[230]. Sheet metal panels shall be G 165 coating designation in conformance with the requirements in ASTM Designation: A 653/A 653M.

Section 56-1.02F, "Steel Walkway Gratings," of the Standard Specifications is amended to read:

56-1.02F Steel Walkway Gratings

• Steel walkway gratings shall be furnished and installed in conformance with the details shown on the plans and the following provisions:

A. Gratings shall be the standard product of an established grating manufacturer.
B. Material for gratings shall be structural steel conforming to the requirements in ASTM Designation: A 1011/A 1011M, Designation CS, Type B.
C. For welded type gratings, each joint shall be full resistance welded under pressure, to provide a sound, completely beaded joint.
D. For mechanically locked gratings, the method of fabrication and interlocking of the members shall be approved by the Engineer, and the fabricated grating shall be equal in strength to the welded type.
E. Gratings shall be accurately fabricated and free from warps, twists, or other defects affecting their appearance or serviceability. Ends of all rectangular panels shall be square. The tops of the bearing bars and cross members shall be in the same plane. Gratings distorted by the galvanizing process shall be straightened.

The sixth through the thirteenth paragraphs in Section 56-1.03, "Fabrication," of the Standard Specifications are amended to read:

• High-strength bolted connections, where shown on the plans, shall conform to the provisions in Section 55-3.14, "Bolted Connections," except that only fastener assemblies consisting of a high-strength bolt, nut, hardened washer, and direct tension indicator shall be used.

• High-strength fastener assemblies, and any other bolts, nuts, and washers attached to sign structures shall be zinc-coated by the mechanical deposition process.

• Nuts for high-strength bolts designated as snug-tight shall not be lubricated.

• An alternating snugging and tensioning pattern for anchor bolts and high-strength bolted splices shall be used. Once tensioned, high-strength fastener components and direct tension indicators shall not be reused.

• For bolt diameters less than 10 mm, the diameter of the bolt hole shall be not more than 0.80-mm larger than the nominal bolt diameter. For bolt diameters greater than or equal to 10 mm, the diameter of the bolt hole shall be not more than 1.6 mm larger than the nominal bolt diameter.

• Sign structures shall be fabricated into the largest practical sections prior to galvanizing.

• Ribbed sheet metal panels for box beam closed truss sign structures shall be fastened to the truss members by cap screws or bolts as shown on the plans, or by 4.76 mm stainless steel blind rivets conforming to Industrial Fasteners Institute, Standard IFI-114, Grade 51. The outside diameter of the large flange rivet head shall be not less than 15.88 mm in diameter. Web splices in ribbed sheet metal panels may be made with similar type blind rivets of a size suitable for the thickness of material being connected.

• Spalling or chipping of concrete structures shall be repaired by the Contractor at the Contractor's expense.

• Overhead sign supports shall have an aluminum identification plate permanently attached near the base, adjacent to the traffic side on one of the vertical posts, using either stainless steel rivets or stainless steel screws. As a minimum, the information on the plate shall include the name of the manufacturer, the date of manufacture and the contract number.

The fifth paragraph of Section 56-2.02B, "Wood Posts," of the Standard Specifications is amended to read:

• Douglas fir and Hem-Fir posts shall be treated in conformance with the provisions in Section 58, "Preservative Treatment of Lumber, Timber and Piling," and in conformance with AWPA Use Category System: UC4A, Commodity Specification A. Posts shall be incised and the minimum retention of preservative shall be as specified in AWPA Standards.

SECTION 57: TIMBER STRUCTURES

Issue Date: October 12, 2004

The second paragraph of Section 57-1.02A, "Structural Timber and Lumber," of the Standard Specifications is amended to read:

• When preservative treatment of timber and lumber is required, the treatment shall conform to the provisions in Section 58, "Preservative Treatment of Lumber, Timber and Piling," and AWPA's Use Category 4B. The type of treatment to be used will be shown on the plans or specified in the special provisions.

SECTION 58: PRESERVATIVE TREATMENT OF LUMBER, TIMBER AND PILING

Issue Date: November 18, 2005

The first paragraph of Section 58-1.02, "Treatment and Retention," of the Standard Specifications is amended to read:

• Timber, lumber, and piling shall be pressure treated after millwork is completed. Preservatives, treatment, and results of treatment shall conform to the requirements in AWPA Standards U1 and T1. Treatment of lumber and timber shall conform to the specified AWPA Use Category cited in the special provisions, on the plans, or elsewhere in these specifications.

The second paragraph of Section 58-1.02, "Treatment and Retention," of the Standard Specifications is deleted.

SECTION 59: PAINTING

Issue Date: June 30, 2006

The first paragraph of Section 59-1.02, "Weather Conditions," of the Standard Specifications is amended to read:

• Paint shall be applied only on thoroughly dry surfaces and during periods of favorable weather. Blast cleaning or application of solvent-borne paint will not be permitted when the atmospheric or surface temperature is at or below 2°C or above 38°C, or when the relative humidity exceeds 85 percent at the site of the work. Application of water-borne paint will not be permitted when the atmospheric or surface temperature is at or below 10°C, or above 38°C, or when the relative humidity exceeds 75 percent at the site of the work. Application of paint will not be permitted when the steel surface temperature is less than 3°C above the dew point, or when freshly painted surfaces may become damaged by rain, fog or condensation, or when it can be anticipated that the atmospheric temperature or relative humidity will not remain within the specified

application conditions during the drying period, except as provided in the following paragraph for enclosures. If uncured paint is damaged by the elements, it shall be replaced or repaired by the Contractor at the Contractor's expense.

The second paragraph of Section 59-1.05, "Protection Against Damage," of the Standard Specifications is amended to read:

- Paint or paint stains on surfaces not designated to be painted shall be removed by the Contractor at the Contractor's expense and to the satisfaction of the Engineer.

Section 59-2.01, "General," of the Standard Specifications is amended by adding the following paragraphs after the first paragraph:

- Unless otherwise specified, no painting Contractors or subcontractors will be permitted to commence work without having the following current "SSPC: The Society for Protective Coatings" (formerly the Steel Structures Painting Council) certifications in good standing:

A. For cleaning and painting structural steel in the field, certification in conformance with the requirements in Qualification Procedure No. 1, "Standard Procedure For Evaluating Painting Contractors (Field Application to Complex Industrial Structures)" (SSPC-QP 1).
B. For removing paint from structural steel, certification in conformance with the requirements in Qualification Procedure No. 2, "Standard Procedure For Evaluating Painting Contractors (Field Removal of Hazardous Coatings from Complex Structures)" (SSPC-QP 2).
C. For cleaning and painting structural steel in a permanent painting facility, certification in conformance with the requirements in Qualification Procedure No. 3, "Standard Procedure For Evaluating Qualifications of Shop Painting Applicators" (SSPC-QP 3). The AISC's Sophisticated Paint Endorsement (SPE) quality program will be considered equivalent to SSPC-QP 3.

The third paragraph of Section 59-2.03, "Blast Cleaning," of the Standard Specifications is amended to read:

- Exposed steel or other metal surfaces to be blast cleaned shall be cleaned in conformance with the requirements in Surface Preparation Specification No. 6, "Commercial Blast Cleaning," of the "SSPC: The Society for Protective Coatings." Blast cleaning shall leave all surfaces with a dense, uniform, angular anchor pattern of not less than 35 µm as measured in conformance with the requirements in ASTM Designation: D 4417.

The first paragraph of Section 59-2.06, "Hand Cleaning," of the Standard Specifications is amended to read:

- Dirt, loose rust and mill scale, or paint which is not firmly bonded to the surfaces shall be removed in conformance with the requirements in Surface Preparation Specification No. 2, "Hand Tool Cleaning," of the "SSPC: The Society for Protective Coatings." Edges of old remaining paint shall be feathered.

The third and fourth paragraphs of Section 59-2.12, "Painting," of the Standard Specifications are amended to read:

- Contact surfaces of stiffeners, railings, built up members or open seam exceeding 6 mils in width that would retain moisture, shall be caulked with polysulfide or polyurethane sealing compound conforming to the requirements in ASTM Designation: C 920, Type S, Grade NS, Class 25, Use O, or other approved material.

- The dry film thickness of the paint will be measured in place with a calibrated Type 2 magnetic film thickness gage in conformance with the requirements in SSPC-PA 2, "Measurement of Dry Coating Thickness with Magnetic Gages," of the "SSPC: The Society for Protective Coatings," except that there shall be no limit to the number or location of spot measurements to verify compliance with specified thickness requirements.

SECTION 72: SLOPE PROTECTION

Issue Date: November 18, 2005

The sixth paragraph of Section 72-4.04, "Construction," of the Standard Specifications is amended to read:

- Pervious backfill material, if required by the plans, shall be placed as shown. A securely tied sack containing 0.03-m^3 of pervious backfill material shall be placed at each weep hole and drain hole. The sack material shall conform to the provisions in Section 88-1.03, "Filter Fabric."

SECTION 75: MISCELLANEOUS METAL

Issue Date: June 30, 2006

The table in the tenth paragraph of Section 75-1.02, "Miscellaneous Iron and Steel," of the Standard Specifications is amended to read:

Material	Specification
Steel bars, plates and shapes	ASTM Designation: A 36/A 36M or A 575, A 576 (AISI or M Grades 1016 through 1030)
Steel fastener components for general applications:	
Bolts and studs	ASTM Designation: A 307
Headed anchor bolts	ASTM Designation: A 307, Grade B, including S1 supplementary requirements
Nonheaded anchor bolts	ASTM Designation: A 307, Grade C, including S1 supplementary requirements and S1.6 of AASHTO Designation: M 314 supplementary requirements or AASHTO Designation: M 314, Grade 36 or 55, including S1 supplementary requirements
High-strength bolts and studs, threaded rods, and nonheaded anchor bolts	ASTM Designation: A 449, Type 1
Nuts	ASTM Designation: A 563, including Appendix X1*
Washers	ASTM Designation: F 844
Components of high-strength steel fastener assemblies for use in structural steel joints:	
Bolts	ASTM Designation: A 325, Type 1
Tension control bolts	ASTM Designation: F 1852, Type 1
Nuts	ASTM Designation: A 563, including Appendix X1*
Hardened washers	ASTM Designation: F 436, Type 1, Circular, including S1 supplementary requirements
Direct tension indicators	ASTM Designation: F 959, Type 325, zinc-coated
Stainless steel fasteners (Alloys 304 & 316) for general applications:	
Bolts, screws, studs, threaded rods, and nonheaded anchor bolts	ASTM Designation: F 593 or F 738M
Nuts	ASTM Designation: F 594 or F 836M
Washers	ASTM Designation: A 240/A 240M and ANSI B 18.22M
Carbon-steel castings	ASTM Designation: A 27/A 27M, Grade 65-35 [450-240], Class 1
Malleable iron castings	ASTM Designation: A 47, Grade 32510 or A 47M, Grade 22010
Gray iron castings	ASTM Designation: A 48, Class 30B
Ductile iron castings	ASTM Designation: A 536, Grade 65-45-12
Cast iron pipe	Commercial quality
Steel pipe	Commercial quality, welded or extruded
Other parts for general applications	Commercial quality

* Zinc-coated nuts that will be tightened beyond snug or wrench tight shall be furnished with a dyed dry lubricant conforming to Supplementary Requirement S2 in ASTM Designation: A 563.

The second paragraph in Section 75-1.03, "Miscellaneous Bridge Metal," of the Standard Specifications is amended to read:

• Miscellaneous bridge metal shall consist of the following, except as further provided in Section 51-1.19, "Utility Facilities," and in the special provisions:

A. Bearing assemblies, equalizing bolts and expansion joint armor in concrete structures.
B. Expansion joint armor in steel structures.
C. Manhole frames and covers, frames and grates, ladder rungs, guard posts and access door assemblies.
D. Deck drains, area drains, retaining wall drains, and drainage piping, except drainage items identified as "Bridge Deck Drainage System" in the special provisions.

The seventh paragraph of Section 75-1.03, "Miscellaneous Bridge Metal," of the Standard Specifications is amended to read:

• Sheet steel for access doors shall be galvanized sheet conforming to the requirements in ASTM Designation: A 653/A 653M, Coating Designation Z600 {G210}.

The table in the eighteenth paragraph of Section 75-1.03, "Miscellaneous Bridge Metal," of the Standard Specifications is amended to read:

Stud Diameter (millimeters)	Sustained Tension Test Load (kilonewtons)
29.01-33.00	137.9
23.01-29.00	79.6
21.01-23.00	64.1
* 18.01-21.00	22.2
15.01-18.00	18.2
12.01-15.00	14.2
9.01-12.00	9.34
6.00-9.00	4.23

* Maximum stud diameter permitted for mechanical expansion anchors.

The table in the nineteenth paragraph of Section 75-1.03, "Miscellaneous Bridge Metal," of the Standard Specifications is amended to read:

Stud Diameter (millimeters)	Ultimate Tensile Load (kilonewtons)
30.01-33.00	112.1
27.01-30.00	88.1
23.01-27.00	71.2
20.01-23.00	51.6
16.01-20.00	32.0
14.01-16.00	29.4
12.00-14.00	18.7

The table in the twenty-second paragraph of Section 75-1.03, "Miscellaneous Bridge Metal," of the Standard Specifications is amended to read:

Installation Torque Values, (newton meters)

Stud Diameter (millimeters)	Shell Type Mechanical Expansion Anchors	Integral Stud Type Mechanical Expansion Anchors	Resin Capsule Anchors and Cast-in-Place Inserts
29.01-33.00	—	—	540
23.01-29.00	—	—	315
21.01-23.00	—	—	235
18.01-21.00	110	235	200
15.01-18.00	45	120	100
12.01-15.00	30	65	40
9.01-12.00	15	35	24
6.00-9.00	5	10	—

The twenty-fourth paragraph of Section 75-1.03, "Miscellaneous Bridge Metal," of the Standard Specifications is amended to read:

- Sealing compound, for caulking and adhesive sealing, shall be a polysulfide or polyurethane material conforming to the requirements in ASTM Designation: C 920, Type S, Grade NS, Class 25, Use O.

The third paragraph in Section 75-1.035, "Bridge Joint Restrainer Units," of the Standard Specifications is amended to read:

- Cables shall be 19 mm preformed, 6 x 19, wire strand core or independent wire rope core (IWRC), galvanized, and in conformance with the requirements in Federal Specification RR-W-410D, right regular lay, manufactured of improved plow steel with a minimum breaking strength of 200 kN. Two certified copies of mill test reports of each manufactured length of cable used shall be furnished to the Engineer.

The second paragraph in Section 75-1.05, "Galvanizing," of the Standard Specifications is amended to read:

- At the option of the Contractor, material thinner than 3.2 mm shall be galvanized either before fabrication in conformance with the requirements of ASTM Designation: A 653/A 653M, Coating Designation Z600, or after fabrication in conformance with the requirements of ASTM Designation: A 123, except that the weight of zinc coating shall average not less than 365 g per square meter of actual surface area with no individual specimen having a coating weight of less than 305 g per square meter.

SECTION 80: FENCES

Issue Date: October 12, 2004

The second paragraph of Section 80-3.01B(2), "Treated Wood Posts and Braces," of the Standard Specifications is amended to read:

- Posts and braces to be treated shall be pressure treated in conformance with the provisions in Section 58, "Preservative Treatment of Lumber, Timber and Piling," and AWPA Use Category System: UC4A, Commodity Specification A or B.

SECTION 81: MONUMENTS

Issue Date: June 30, 2006

The fifth paragraph of Section 81-1.02, "Materials," of the Standard Specifications is amended to read:

- At the option of the Contractor, the frame and cover for Type B and Type D survey monuments shall be fabricated from either cast steel or gray cast iron. The covers shall fit into the frames without rocking.

The seventh paragraph of Section 81-1.02, "Materials," of the Standard Specifications is amended to read:

- Granular material for Type B and Type D survey monuments shall be gravel, crushed gravel, crushed rock or any combination thereof. Granular material shall not exceed 37.5 mm in greatest dimension.

SECTION 82: MARKERS AND DELINEATORS

Issue Date: June 30, 2006

The first paragraph of Section 82-1.02B, "Metal Posts," of the Standard Specifications is amended to read:

- Steel for metal posts shall conform to the requirements in ASTM Designation: A 36/A 36M. The posts shall be galvanized in conformance with the requirements in Section 75-1.05, "Galvanizing."

The third paragraph of Section 82-1.02D, "Target Plates," of the Standard Specifications is amended to read:

- The zinc-coated steel sheet shall conform to the requirements in ASTM Designation: A 653/A 653M, Classification: Commercial Steel (CS Types A, B and C). The steel sheets shall be galvanized in conformance with the requirements in Section 75-1.05, "Galvanizing." The zinc-coated surface shall be prepared for painting in a manner designed to produce optimum paint adherence. The surface preparation shall be accomplished without damaging or removing the zinc coating. Any evidence of damage or removal of the zinc coating shall be cause for rejection of the entire lot.

The eleventh paragraph of Section 82-1.02D, "Target Plates," of the Standard Specifications is amended to read:

- When tested in conformance with the requirements in California Test 671, the painted metal target plates shall, in general, have satisfactory resistance to weathering, humidity, salt spray and chemicals; the enamel coating shall have satisfactory adherence and impact resistance, a pencil lead hardness of HB minimum, 60° specular gloss of 80 percent minimum, an excitation purity of 3 percent maximum as received and after 1000 hours in an artificial weathering device in conformance with the requirements in ASTM Designation: G 155, Table X3.1, Cycle 1, and a daylight luminous directional reflectance ("Y" value) of 70 minimum.

The second paragraph of Section 82-1.02F, "Reflectors," of the Standard Specifications is amended to read:

- Reflectors for flexible target plates on Type K object markers and target plates on Class 2 delineators, and reflectors for Class 1 delineators shall be made from impact resistant retroreflective sheeting as specified in the special provisions. The color of the retroreflective sheeting shall conform to the color designated on the plans and the Chromaticity Coordinates specified in ASTM Designation: D 4956, or the PR color number specified by the Federal Highway Administration's Color Tolerance Chart.

The fourth paragraph of Section 82-1.02F, "Reflectors," of the Standard Specifications is amended to read:

The instrumental method of determining color shall conform to the requirements specified in ASTM Designation: D 4956. In the event of any dispute concerning the test results of instrumental testing, the visual test shall prevail.

SECTION 83: RAILINGS AND BARRIERS

Issue Date: January 28, 2005

The first paragraph of Section 83-1.02B, "Metal Beam Guard Railing," of the Standard Specifications is amended to read:

- The rail elements, backup plates, terminal sections, end and return caps, bolts, nuts and other fittings shall conform to the requirements in AASHTO Designation: M 180, except as modified in this Section 83-1.02B and as specified in Section 83-1.02. The rail elements, backup plates, terminal sections, end and return caps shall conform to Class A, Type 1 W-Beam guard railing as shown in AASHTO Designation: M 180. The edges and center of the rail element shall contact each post block. Rail element joints shall be lapped not less than 316 mm and bolted. The rail metal, in addition to conforming to the requirements in AASHTO Designation: M 180, shall withstand a cold bend, without cracking, of 180 degrees around a mandrel of a diameter equal to 2.5 times the thickness of the plate.

The ninth paragraph in Section 83-1.02B, "Metal Beam Guard Railing," of the Standard Specifications is amended to read:

- The grades and species of wood posts and blocks shall be No. 1 timbers (also known as No. 1 structural) Douglas fir or No. 1 timbers Southern yellow pine. Wood posts and blocks shall be graded in conformance with the provisions in Section 57-2, "Structural Timber," of the Standard Specifications, except allowances for shrinkage after mill cutting shall in no case exceed 5 percent of the American Lumber Standards minimum sizes, at the time of installation.

The eleventh paragraph in Section 83-1.02B, "Metal Beam Guard Railing," of the Standard Specifications is amended to read:

- After fabrication, wood posts and blocks shall be pressure treated in conformance with Section 58, "Preservative Treatment of Lumber, Timber and Piling," and AWPA Use Category System: UC4A, Commodity Specification A.

The twelfth paragraph in Section 83-1.02B, "Metal Beam Guard Railing," of the Standard Specifications is amended to read:

- If copper naphthenate, ammoniacal copper arsenate, chromated copper arsenate, ammoniacal copper zinc arsenate, ammoniacal copper quat or copper azole is used to treat the wood posts and blocks, the bolt holes shall be treated as follows:

A. Before the bolts are inserted, bolt holes shall be filled with a grease, recommended by the manufacturer for corrosion protection, which will not melt or run at a temperature of 65°C.

The twenty-fourth paragraph of Section 83-1.02B, "Metal Beam Guard Railing," of the Standard Specifications is amended to read:

- End anchor assemblies and rail tensioning assemblies for metal beam guard railing shall be constructed as shown on the plans and shall conform to the following provisions:

An end anchor assembly (Type SFT) for metal beam guard railing shall consist of an anchor cable, an anchor plate, a wood post, a steel foundation tube, a steel soil plate and hardware.

An end anchor assembly (Type CA) for metal beam guard railing shall consist of an anchor cable, an anchor plate, a single anchor rod or double anchor rods, hardware and one concrete anchor.

A rail tensioning assembly for metal beam guard railing shall consist of an anchor cable, an anchor plate, and hardware.

The anchor plate, metal plates, steel foundation tubes and steel soil plate shall be fabricated of steel conforming to the requirements in ASTM Designation: A 36/A 36M.

The anchor rods shall be fabricated of steel conforming to the requirements in ASTM Designation: A 36/A 36M, A 441 or A 572, or ASTM Designation: A 576, Grades 1018, 1019, 1021 or 1026. The eyes shall be hot forged or formed with full penetration welds. After fabrication, anchor rods with eyes that have been formed with any part of the eye below 870°C during the forming operation or with eyes that have been closed by welding shall be thermally stress relieved prior to galvanizing. The completed anchor rod, after galvanizing, shall develop a strength of 220 kN.

In lieu of built-up fabrication of anchor plates as shown on the plans, anchor plates may be press-formed from steel plate, with or without welded seams.

All bolts and nuts shall conform to the requirements in ASTM Designation: A 307, unless otherwise specified in the special provisions or shown on the plans.

Anchor cable shall be 19-mm preformed, 6 x 19, wire strand core or independent wire rope core (IWRC), galvanized in conformance with the requirements in Federal Specification RR-W-410D, right regular lay, manufactured of improved plow steel with a minimum breaking strength of 200 kN. Two certified copies of mill test reports of each manufactured length of cable used shall be furnished to the Engineer. The overall length of each cable anchor assembly shall be as shown on the plans, but shall be a minimum of 2 m.

Where shown on the plans, cable clips and a cable thimble shall be used to attach cable to the anchor rod. Thimbles shall be commercial quality, galvanized steel. Cable clips shall be commercial quality drop forged galvanized steel.

The swaged fitting shall be machined from hot-rolled bars of steel conforming to AISI Designation: C 1035, and shall be annealed suitable for cold swaging. The swaged fitting shall be galvanized before swaging. A lock pin hole to accommodate a 6-mm, plated, spring steel pin shall be drilled through the head of the swage fitting to retain the stud in proper position. The manufacturer's identifying mark shall be stamped on the body of the swage fitting.

The 25-mm nominal diameter stud shall conform to the requirements in ASTM Designation: A 449 after galvanizing. Prior to galvanizing, a 10-mm slot for the locking pin shall be milled in the stud end.

The swaged fittings, stud and nut assembly shall develop the specified breaking strength of the cable.

The cable assemblies shall be shipped as a complete unit including stud and nut.

Clevises shall be drop forged galvanized steel and shall develop the specified breaking strength of the cable.

One sample of cable properly fitted with swaged fitting and right hand thread stud at both ends as specified above, including a clevis when shown on the plans, one meter in total length, shall be furnished the Engineer for testing.

The portion of the anchor rod to be buried in earth shall be coated with a minimum 0.5-mm thickness of coal tar enamel conforming to AWWA Standard: C203 or a coal tar epoxy conforming to the requirements in Steel Structures Painting Council Paint Specification No. 16, Coal-Tar

Epoxy-Polymide Black Paint or Corps of Engineers Specification, Formula C-200a, Coal-Tar Epoxy Paint.

Metal components of the anchor assembly shall be fabricated in conformance with good shop practice and shall be hot-dip galvanized in conformance with the provisions in Section 75-1.05, "Galvanizing."

Anchor cables shall be tightened after the concrete anchor has cured for at least 5 days.

Concrete used to construct anchors for end anchor assemblies shall be Class 3 or minor concrete conforming to the provisions in Section 90, "Portland Cement Concrete."

Concrete shall be placed against undisturbed material of the excavated holes for end anchors. The top 300 mm of holes shall be formed, if required by the Engineer.

Reinforcing steel in concrete anchors for end anchor assemblies shall conform to the provisions in Section 52, "Reinforcement."

The second paragraph in Section 83-1.02D, "Steel Bridge Railing," of the Standard Specifications is amended to read:

- Structural shapes, tubing, plates, bars, bolts, nuts, and washers shall be structural steel conforming to the provisions in Section 55-2, "Materials." Other fittings shall be commercial quality.

The second and third paragraphs in Section 83-1.02E, "Cable Railing," of the Standard Specifications are replaced with the following paragraph:

- Pipe for posts and braces shall be standard steel pipe or pipe that conforms to the provisions in Section 80-4.01A, "Posts and Braces."

The fourteenth paragraph in Section 83-1.02I, "Chain Link Railing," of the Standard Specifications is amended to read:

- Chain link fabric shall be either 11-gage Type I zinc coated fabric conforming to the requirements in AASHTO Designation: M 181 or 11-gage Type IV polyvinyl chloride (PVC) coated fabric conforming to the requirements in Federal Specification RR-F-191/1D.

The second paragraph of Section 83-1.03, "Measurement," of the Standard Specifications is amended to read:

- Except for metal beam guard railing within the pay limits of a terminal system end treatment or transition railing (Type WB), metal beam guard railing will be measured by the meter along the face of the rail element from end post to end post of the completed railing at each installation. The point of measurement at each end post will be the center of the bolt attaching the rail element to the end post.

The seventh paragraph of Section 83-1.03, "Measurement," of the Standard Specifications is amended to read:

- The quantities of end anchor assemblies (Type SFT or Type CA) and rail tensioning assemblies will be measured as units determined from actual count. An end anchor assembly (Type CA) with 2 cables attached to one concrete anchor will be counted as one terminal anchor assembly (Type CA) for measurement and payment.

The eighth paragraph of Section 83-1.03, "Measurement," of the Standard Specifications is amended to read:

- The quantities of return and end caps and the various types of terminal sections for metal beam guard railing will be determined as units from actual count.

The third paragraph of Section 83-1.04, "Payment," of the Standard Specifications is amended to read:

- The contract unit prices paid for end anchor assembly (Type SFT), end anchor assembly (Type CA), and rail tensioning assembly shall include full compensation for furnishing all labor, materials, tools, equipment, and incidentals, and for doing all work involved in constructing the end anchor assemblies, complete in place, including drilling anchor plate bolt holes in rail elements, driving steel foundation tubes, excavating for concrete anchor holes and disposing of surplus material, as shown on the plans, as specified in these specifications and the special provisions, and as directed by the Engineer.

The fourth paragraph of Section 83-1.04, "Payment," of the Standard Specifications is amended to read:

- The contract unit prices paid for return caps, end caps, and the various types of terminal sections for metal beam guard railing shall include full compensation for furnishing all labor, materials, tools, equipment, and incidentals, and for doing all the work involved in installing terminal sections, return and end caps, complete in place, as shown on the plans, as specified in these specifications and the special provisions, and as directed by the Engineer.

The second paragraph of Section 83-2.02B, "Thrie Beam Barrier," of the Standard Specifications is amended to read:

- Rail elements, backup plates, terminal connectors, terminal sections, and return caps shall conform to Class A, Type 1 thrie beam guard railing as shown in AASHTO Designation: M 180.

The fourteenth paragraph of Section 83-2.02B, "Thrie Beam Barrier," of the Standard Specifications is amended to read:

- All metal work shall be fabricated in the shop, and no punching, cutting or welding will be permitted in the field. Rail elements shall be lapped so that the exposed ends will not face approaching traffic. Terminal sections and return caps shall be installed in conformance with the manufacturer's recommendation.

The first paragraph in Section 83-2.02D(2), "Materials," of the Standard Specifications is amended to read:

- Type 50 and 60 series concrete barriers shall be constructed of minor concrete conforming to the provisions in Section 90-10, "Minor Concrete," except as follows:

a. The maximum size of aggregate used for extruded or slip-formed concrete barriers shall be at the option of the Contractor, but in no case shall the maximum size be larger than 37.5-mm or smaller than 9.5-mm.
b. If the 9.5-mm maximum size aggregate grading is used to construct extruded or slip-formed concrete barriers, the cementitious material content of the minor concrete shall be not less than 400 kg/m^3.

The third paragraph in Section 83-2.02D(2), "Materials," of the Standard Specifications is amended to read:

- The concrete paving between the tops of the 2 walls of concrete barrier (Types 50E, 60E, 60GE, and 60SE) and the optional concrete slab at the base between the 2 walls of concrete barrier (Types 50E, 60E, 60GE, and 60SE) shall be constructed of minor concrete conforming to the provisions of Section 90-10, except that the minor concrete shall contain not less than 300 kg of cementitious material per cubic meter.

The first paragraph of Section 83-2.03, "Measurement," of the Standard Specifications is amended to read:

- Except for single thrie beam barrier within the pay limits of transition railing (Type STB), single thrie beam barrier will be measured by the meter from end post to end post along the face of the rail element of the installed barrier. Single thrie beam barriers constructed on each side of piers under structures or other obstructions will be measured for payment along each line of the installed barrier.

The second paragraph of Section 83-2.03, "Measurement," of the Standard Specifications is amended to read:

- Except for double thrie beam barrier within the pay limits of transition railing (Type DTB), double thrie beam barrier will be measured by the meter from end post to end post along the center line of the installed barrier.

The fifth paragraph of Section 83-2.03, "Measurement," of the Standard Specifications is amended to read:

- The quantity of return caps, terminal connectors and the various types of terminal sections for single and double thrie beam barriers will be determined as units from actual count.

The sixth paragraph of Section 83-2.03, "Measurement," of the Standard Specifications is amended to read:

- The quantity of end anchor assemblies will be paid for as units determined from actual count.

The first paragraph of Section 83-2.04, "Payment," of the Standard Specifications is amended to read:

- The various types of thrie beam barrier, measured as specified in Section 83-2.03, "Measurement," will be paid for at the contract price per meter for single or double thrie beam barrier, whichever applies, and the contract unit price or prices for end anchor assemblies, return caps, terminal connectors and the various types of terminal sections.

The second paragraph of Section 83-2.04, "Payment," of the Standard Specifications is amended to read:

- The above prices and payments shall include full compensation for furnishing all labor, materials, tools, equipment and incidentals, and for doing all the work involved in constructing the barrier, complete in place, including drilling holes for wood posts, driving posts, backfilling the space around posts, excavating and backfilling end anchor assembly holes, connecting thrie beam barrier to concrete surfaces and disposing of surplus excavated material, and for furnishing, placing, removing and disposing of the temporary railing for closing the gap between existing barrier and the barrier being constructed as shown on the plans, and as specified in these specifications and the special provisions, and as directed by the Engineer.

The fourth paragraph in Section 83-2.04, "Payments," of the Standard Specifications is amended to read:

• Steel plate barrier attached to concrete barrier at overhead sign foundations, electroliers, drainage structures, and other locations shown on the plans will be measured and paid for as the type of concrete barrier attached thereto.

SECTION 84: TRAFFIC STRIPES AND PAVEMENT MARKINGS

Issue Date: July 21, 2006

The first paragraph of Section 84-2.02, "Materials," of the Standard Specifications is amended to read:

• The thermoplastic material shall conform to State Specification PTH-02SPRAY, PTH-02HYDRO or PTH-02ALKYD. Glass beads to be applied to the surface of the molten thermoplastic material shall conform to the requirements of State Specification 8010-004 (Type II).

The first paragraph of Section 84-3.02, "Materials," of the Standard Specifications is amended to read:

• Paint for traffic stripes and pavement markings shall conform to the following State Specifications:

Paint Type	Color	State Specification No.
Waterborne Traffic Line	White, Yellow and Black	PTWB-01
Acetone-Based	White, Yellow and Black	PT-150VOC(A)
Waterborne Traffic Line for disabled persons' parking, and other curb markings	Blue, Red and Green	Federal Specification No. TT-P-1952D

The fourth paragraph of Section 84-3.02, "Materials," of the Standard Specifications is amended to read:

• The kind of paint to be used (waterborne or acetone-based) shall be determined by the Contractor based on the time of year the paint is applied and local air pollution control regulations.

The first paragraph of Section 84-3.05, "Application," of the Standard Specifications is amended to read:

Traffic stripes and pavement markings shall be applied only on dry surfaces and only during periods of favorable weather. Painting shall not be performed when the atmospheric temperature is below 5°C when using acetone-based paint or below 10°C when using water borne paint; when freshly painted surfaces may become damaged by rain, fog, or condensation; nor when it can be anticipated that the atmospheric temperature will drop below the aforementioned 5°C or 10°C temperatures during the drying period.

The third paragraph of Section 84-3.05, "Application," of the Standard Specifications is deleted.

The tenth paragraph of Section 84-3.05, "Application," of the Standard Specifications is amended to read:

• Paint to be applied in 2 coats shall be applied approximately as follows:

Paint Type	Square Meter Coverage Per Liter	
	First Coat	Second Coat
Waterborne Paint	6	6
Acetone-Based Paint	10	5

SECTION 85: PAVEMENT MARKERS

Issue Date: June 30, 2006

The second through fifth paragraphs in Section 85-1.03, "Sampling, Tolerances and Packaging," of the Standard Specifications are amended to read:

Sampling

- Twenty markers selected at random will constitute a representative sample for each lot of markers.
- The lot size shall not exceed 25 000 markers.

Tolerances

- Three test specimens will be randomly selected from the sample for each test and tested in conformance with these specifications. Should any one of the 3 specimens fail to conform with the requirements in these specifications, 6 additional specimens will be tested. The failure of any one of these 6 specimens shall be cause for rejection of the entire lot or shipment represented by the sample.
- The entire sample of retroreflective pavement markers will be tested for reflectance. The failure of 10 percent or more of the original sampling shall be cause for rejection.

Section 85-1.04, "Non-Reflective Pavement Markers," of the Standard Specifications is amended to read:

85-1.04 Non-Reflective Pavement Markers

- Non-reflective pavement markers (Types A and AY) shall be, at the option of the Contractor, either ceramic or plastic conforming to these specifications.
- The top surface of the marker shall be convex with a gradual change in curvature. The top, bottom and sides shall be free of objectionable marks or discoloration that will affect adhesion or appearance.
- The bottom of markers shall have areas of integrally formed protrusions or indentations, which will increase the effective bonding surface area of adhesive. The bottom surface of the marker shall not deviate more than 1.5 mm from a flat surface. The areas of protrusion shall have faces parallel to the bottom of the marker and shall project approximately one mm from the bottom.

The second through fourth paragraphs of Section 85-1.04A, "Non-Reflective Pavement Markers (Ceramic)," of the Standard Specifications are deleted.

The table in the fifth paragraph in Section 85-1.04A, "Non-Reflective Pavement Markers (Ceramic)," of the Standard Specifications is amended to read:

Testing

- Tests shall be performed in conformance with the requirements in California Test 669.

Test	Test Description	Requirement
a	Bond strength	4.8 MPa, min.
b	Glaze thickness	180 µm, min.
c	Hardness	6 Moh, min.
d	Luminance factor, Type A, white markers only, glazed surface	75, min.
e	Yellowness index, Type A, white markers only, glazed surface	7, max.
f	Color-yellow, Type AY, yellow markers only. The chromaticity coordinates shall be within a color box defined in CTM 669	Pass
g	Compressive strength	6700 N, min.
h	Water absorption	2.0 %, max.
i	Artificial weathering, 500 hours exposure, yellowness index	20, max.

Section 85-1.04B, "Non-Reflective Pavement Markers (Plastic)," of the Standard Specifications is amended to read:

85-1.04B Non-Reflective Pavement Markers (Plastic)

- Plastic non-reflective pavement markers Types A and AY shall be, at the option of the Contractor, either polypropylene or acrylonitrile-butadiene-styrene (ABS) plastic type.
- Plastic markers shall conform to the testing requirements specified in Section 85-1.04A, "Non-Reflective Pavement Markers (Ceramic)," except that Tests a, b, c, and h shall not apply. The plastic markers shall not be coated with substances that interfere with the ability of the adhesive bonding to the marker.

The sixth and seventh paragraphs in Section 85-1.05, "Retroreflective Pavement Markers," of the Standard Specifications are amended to read:

Testing

- Tests shall be performed in conformance with the requirements in California Test 669.

Test Description	Requirement		
Bond strength[a]	3.4 MPa, min.		
Compressive strength[b]	8900 N, min.		
Abrasion resistance, marker must meet the respective specific intensity minimum requirements after abrasion.	Pass		
Water Soak Resistance	No delamination of the body or lens system of the marker nor loss of reflectance		
	Specific Intensity		
Reflectance	Clear	Yellow	Red
0° Incidence Angle, min.	3.0	1.5	0.75
20° Incidence Angle, min.	1.2	0.60	0.30
After one year field evaluation	0.30	0.15	0.08

a. Failure of the marker body or filler material prior to reaching 3.4 MPa shall constitute a failing bond strength test.

b. Deformation of the marker of more than 3 mm at a load of less than 8900 N or delamination of the shell and the filler material of more than 3 mm regardless of the load required to break the marker shall be cause for rejection of the markers as specified in Section 85-1.03, "Sampling, Tolerances and Packaging."

• Pavement markers to be placed in pavement recesses shall conform to the above requirements for retroreflective pavement markers except that the minimum compressive strength requirement shall be 5338 N.

The eighth paragraph of Section 85-1.05, "Retroreflective Pavement Markers" of the Standard Specifications is deleted.

The eighth paragraph in Section 85-1.06, "Replacement," of the Standard Specifications is amended to read:

• Epoxy adhesive shall not be used to apply non-reflective plastic pavement markers.

The seventh sentence of the fourteenth paragraph of Section 85-1.06, "Placement," of the Standard Specifications is amended to read:

• Soft rags moistened with mineral spirits conforming to Army Mil-PRF-680A(1) or kerosene may be used, if necessary, to remove adhesive from exposed faces of pavement markers.

SECTION 86: SIGNALS, LIGHTING AND ELECTRICAL SYSTEMS

Issue Date: June 30, 2006

The second paragraph of Section 86-1.01, "Description," of the Standard Specifications is amended to read:

• The locations of signals, beacons, standards, lighting fixtures, signs, controls, services and appurtenances shown on the plans are approximate and the exact locations will be approved by the Engineer in the field.

The tenth paragraph of Section 86-1.06, "Maintaining Existing and Temporary Electrical Systems," of the Standard Specifications is amended to read:

• These provisions will not relieve the Contractor in any manner of the Contractor's responsibilities as provided in Section 7-1.12, "Indemnification and Insurance," and Section 7-1.16, "Contractor's Responsibility for the Work and Materials."

The first paragraph of Section 86-2.03, "Foundations," of the Standard Specifications is amended to read:

• Except for concrete for cast-in-drilled-hole concrete pile foundations, portland cement concrete shall conform to Section 90-10, "Minor Concrete."

The fifth paragraph of Section 86-2.03, "Foundations," of the Standard Specifications is amended to read:

• Reinforced cast-in-drilled-hole concrete pile foundations for traffic signal and lighting standards shall conform to the provisions in Section 49, "Piling," with the following exceptions: 1) Material resulting from drilling holes shall be disposed of in conformance with the provisions in Section 86-2.01, "Excavating and Backfilling," and 2) Concrete filling for cast-in-drilled-hole concrete piles will not be considered as designated by compressive strength.

The seventh paragraph of Section 86-2.03, "Foundations," of the Standard Specifications is amended to read:

• Forms shall be true to line and grade. Tops of foundations for posts and standards, except special foundations, shall be finished to curb or sidewalk grade or as directed by the Engineer. Forms shall be rigid and securely braced in place. Conduit ends and anchor bolts shall be placed in proper position and to proper height, and anchor bolts shall be held in place by means of rigid top and bottom templates. The bottom template shall be made of steel. The bottom template shall provide proper spacing and alignment of the anchor bolts near their bottom embedded end. The bottom template shall be installed before placing footing concrete. Anchor bolts shall not be installed more than 1:40 from vertical.

Section 86-2.03, "Foundations," of the Standard Specifications is amended by deleting the eighth paragraph.

The twelfth paragraph of Section 86-2.03, "Foundations," of the Standard Specifications is amended to read:

• Plumbing of the standards shall be accomplished by adjusting the leveling nuts before placing the mortar or before the foundation is finished to final grade. Shims or other similar devices shall not be used for plumbing or raking of posts, standards, or pedestals. After final adjustments of both top nuts and leveling nuts on anchorage assemblies have been made, firm contact shall exist between all bearing surfaces of the anchor bolt nuts, washers, and the base plates.

The first paragraph of Section 86-2.04, "Standards, Steel Pedestals and Posts," of the Standard Specifications is amended to read:

• Bolts, nuts and washers, and anchor bolts for use in signal and lighting support structures shall conform to the provisions in Section 55-2, "Materials." Except when bearing-type connections or slipbases are specified, high-strength bolted connections shall conform to the provisions in Section 55-3.14, "Bolted Connections." Welding, nondestructive testing (NDT) of welds, and acceptance and repair criteria for NDT of steel members shall conform to the requirements of AWS D1.1 and the special provisions.

The second paragraph of Section 86-2.04, "Standards, Steel Pedestals and Posts," of the Standard Specifications is amended to read:

• On each lighting standard except Type 1, one rectangular corrosion resistant metal identification tag shall be permanently attached above the hand hole, near the base of the standard, using stainless steel rivets. On each signal pole support, two corrosion resistant metal identification tags shall be attached, one above the hand hole near the base of the vertical standard and one on the underside of the signal mast arm near the arm plate. As a minimum, the information on each identification tag shall include the name of the manufacturer, the date of manufacture, the identification number as shown on the plans, the contract number, and a unique identification code assigned by the fabricator. This number shall be traceable to a particular contract and the welds on that component, and shall be readable after the support structure is coated and installed. The lettering shall be a minimum of 7 mm high. The information may be either depressed or raised, and shall be legible.

The fourth paragraph of Section 86-2.04, "Standards, Steel Pedestals and Posts," of the Standard Specifications is amended to read:

• Ferrous metal parts of standards, with shaft length of 4.6 m and longer, shall conform to the details shown on the plans, the provisions in Section 55-2, "Materials," except as otherwise noted, and the following requirements:

Except as otherwise specified, standards shall be fabricated from sheet steel of weldable grade having a minimum yield strength, after fabrication, of 276 MPa.

Certified test reports which verify conformance to the minimum yield strength requirements shall be submitted to the Engineer. The test reports may be the mill test reports for the as-received steel or, when the as-received steel has a lower yield strength than required, the Contractor shall provide supportive test data which provides assurance that the Contractor's method of cold forming will consistently increase the tensile properties of the steel to meet the specified minimum yield strength. The supportive test data shall include tensile properties of the steel after cold forming for specific heats and thicknesses.

When a single-ply 8-mm thick pole is specified, a 2-ply pole with equivalent section modulus may be substituted.

Standards may be fabricated of full-length sheets or shorter sections. Each section shall be fabricated from not more than 2 pieces of sheet steel. Where 2 pieces are used, the longitudinal welded seams shall be directly opposite one another. When the sections are butt-welded together, the longitudinal welded seams on adjacent sections shall be placed to form continuous straight seams from base to top of standard.

Butt-welded circumferential joints of tubular sections requiring CJP groove welds shall be made using a metal sleeve backing ring inside each joint. The sleeve shall be 3-mm nominal thickness, or thicker, and manufactured from steel having the same chemical composition as the steel in the tubular sections to be joined. When the sections to be joined have different specified minimum yield strengths, the steel in the sleeve shall have the same chemical composition as the tubular section having the higher minimum yield strength. The width of the metal sleeve shall be consistent with the type of NDT chosen and shall be a minimum width of 25 mm. The sleeve shall be centered at the joint and be in contact with the tubular section at the point of the weld at time of fit-up.

Welds shall be continuous.

The weld metal at the transverse joint shall extend to the sleeve, making the sleeve an integral part of the joint.

During fabrication, longitudinal seams on vertical tubular members of cantilevered support structures shall be centered on and along the side of the pole that the pole plate is located. Longitudinal seams on horizontal tubular members, including signal and luminaire arms, shall be within +/-45 degrees of the bottom of the arm.

The longitudinal seam welds in steel tubular sections may be made by the electric resistance welding process.

Longitudinal seam welds shall have 60 percent minimum penetration, except that within 150 mm of circumferential welds, longitudinal seam welds shall be CJP groove welds. In addition, longitudinal seam welds on lighting support structures having telescopic pole segment splices shall be CJP groove welds on the female end for a length on each end equal to the designated slip fit splice length plus 150 mm.

Exposed circumferential welds, except fillet and fatigue-resistant welds, shall be ground flush (-0, +2mm) with the base metal prior to galvanizing or painting.

Circumferential welds and base plate-to-pole welds may be repaired only one time without written permission from the Engineer.

Exposed edges of the plates that make up the base assembly shall be finished smooth and exposed corners of the plates shall be broken unless otherwise shown on the plans. Shafts shall be provided with slip-fitter shaft caps.

Flatness of surfaces of 1) base plates that are to come in contact with concrete, grout, or washers and leveling nuts; 2) plates in high-strength bolted connections; 3) plates in joints where cap screws are used to secure luminaire and signal arms; and 4) plates used for breakaway slip base assemblies shall conform to the requirements in ASTM A6.

Standards shall be straight, with a permissive variation not to exceed 25 mm measured at the midpoint of a 9-m or 11-m standard and not to exceed 20 mm measured at the midpoint of a 5-m through 6-m standard. Variation shall not exceed 25 mm at a point 4.5 m above the base plate for Type 35 and Type 36 standards.

Zinc-coated nuts used on fastener assemblies having a specified preload (obtained by specifying a prescribed tension, torque value, or degree of turn) shall be provided with a colored lubricant that is clean and dry to the touch. The color of the lubricant shall be in contrast to the zinc coating on the nut so that the presence of the lubricant is visually obvious. In addition, either the lubricant shall be insoluble in water, or fastener components shall be shipped to the job site in a sealed container.

No holes shall be made in structural members unless the holes are shown on the plans or are approved in writing by the Engineer.

Standards with an outside diameter of 300 mm or less shall be round. Standards with an outside diameter greater than 300 mm shall be round or multisided. Multisided standards shall have a minimum of 12 sides which shall be convex and shall have a minimum bend radius of 100 mm.

Mast arms for standards shall be fabricated from material as specified for standards, and shall conform to the dimensions shown on the plans.

The cast steel option for slip bases shall be fabricated from material conforming to the requirements in ASTM Designation: A 27/A 27M, Grade 70-40. Other comparable material may be used if written permission is given by the Engineer. The casting tolerances shall be in conformance with the Steel Founder's Society of America recommendations (green sand molding).

One casting from each lot of 50 castings or less shall be subject to radiographic inspection, in conformance with the requirements in ASTM Designation: E 94. The castings shall comply with the acceptance criteria severity level 3 or better for the types and categories of discontinuities in conformance with the requirements in ASTM Designations: E 186 and E 446. If the one casting fails to pass the inspection, 2 additional castings shall be radiographed. Both of these castings shall pass the inspection, or the entire lot of 50 will be rejected.

Material certifications, consisting of physical and chemical properties, and radiographic films of the castings shall be filed at the manufacturer's office. These certifications and films shall be available for inspection upon request.

High-strength bolts, nuts, and flat washers used to connect slip base plates shall conform to the requirements in ASTM Designation: A 325 or A 325M and shall be galvanized in conformance with the provisions in Section 75-1.05, "Galvanizing."

Plate washers shall be fabricated by saw cutting and drilling steel plate conforming to the requirements in AISI Designation: 1018, and be galvanized in conformance with the provisions in Section 75-1.05,

"Galvanizing." Prior to galvanizing, burrs and sharp edges shall be removed and holes shall be chamfered sufficiently on each side to allow the bolt head to make full contact with the washer without tension on the bolt.

High-strength cap screws shown on the plans for attaching arms to standards shall conform to the requirements in ASTM Designation: A 325, A 325M, or A 449, and shall comply with the mechanical requirements in ASTM Designation: A 325 or A 325M after galvanizing. The cap screws shall be galvanized in conformance with the provisions in Section 75-1.05, "Galvanizing." The threads of the cap screws shall be coated with a colored lubricant that is clean and dry to the touch. The color of the lubricant shall be in contrast to the color of the zinc coating on the cap screw so that presence of the lubricant is visually obvious. In addition, either the lubricant shall be insoluble in water, or fastener components shall be shipped to the job site in a sealed container.

Unless otherwise specified, bolted connections attaching signal or luminaire arms to poles shall be considered slip critical. Galvanized faying surfaces on plates on luminaire and signal arms and matching plate surfaces on poles shall be roughened by hand using a wire brush prior to assembly and shall conform to the requirements for Class C surface conditions for slip-critical connections in "Specification for Structural Joints Using ASTM A 325 or A 490 Bolts," a specification approved by the Research Council on Structural Connections (RCSC) of the Engineering Foundation. For faying surfaces required to be painted, the paint shall be an approved type, brand, and thickness that has been tested and approved according to the RCSC Specification as a Class B coating.

Samples of fastener components will be randomly taken from each production lot by the Engineer and submitted, along with test reports required by appropriate ASTM fastener specifications, for QA testing and evaluation. Sample sizes for each fastener component shall be as determined by the Engineer.

The seventh paragraph of Section 86-2.04, "Standards, Steel Pedestals and Posts," of the Standard Specifications is amended to read:

- To avoid interference of arm plate-to-tube welds with cap screw heads, and to ensure cap screw heads can be turned using conventional installation tools, fabricators shall make necessary adjustments to details prior to fabrication and properly locate the position of arm tubes on arm plates during fabrication.

The traffic signal controller cabinet requirement in the table in Section 86-2.08A, "Conductor Identification," of the Standard Specifications is amended to read:

Traffic Signal Controller Cabinet	Ungrounded between Service	Blk	None	CON-1	6
	Grounded Circuit Conductor	White	None	CON-2	6

The second paragraph of Section 86-2.08B, "Multiple Circuit Conductors," of the Standard Specifications is amended to read by the following 2 paragraphs:

- At any point, the minimum insulation thickness of any Type USE, RHH, or RHW insulation shall be 1.0 mm for conductor sizes No. 14 to No. 10, inclusive; and 1.3 mm for No. 8 to No. 2, inclusive.
- At any point, the minimum insulation thickness of any Type THW or TW wires shall be 0.7 mm for conductor sizes No. 14 to No. 10, inclusive; 1.0 mm for No. 8; and 1.4 mm for No. 6 to No. 2, inclusive.

The sixth and seventh paragraphs of 86-2.12, "Wood Poles," of the Standard Specifications are amended to read:

- After fabrication, wood poles shall be pressure treated in conformance with the provisions in Section 58, "Preservative Treatment of Lumber, Timber and Piling," and AWPA Use Category System: UC4B, Commodity Specification D.

- Wood poles, when specified in the special provisions to be painted, shall be treated with waterborne wood preservatives.

The first paragraph of Section 86-2.15, "Galvanizing," of the Standard Specifications is amended to read:

- Galvanizing shall be in conformance with the provisions in Section 75-1.05, "Galvanizing," except that cabinets may be constructed of material galvanized prior to fabrication in conformance with the requirements in ASTM Designation: A 653/653M, Coating Designation G 90, in which case all cut or damaged edges shall be painted with at least 2 applications of approved unthinned zinc-rich primer (organic vehicle type) conforming to the provisions in Section 91, "Paint." Aerosol cans shall not be used. Other types of protective coating must be approved by the Engineer prior to installation.

Subparagraph B of the thirteenth paragraph of Section 86-2.16, "Multiple Circuit Conductors," of the Standard Specifications is amended to read:

B. Salt Spray Resistance - The undercutting of the film of the coating system shall not exceed 3 mm average, from lines scored diagonally and deep enough to expose the base metal, after 336 hours exposure in a salt spray cabinet in conformance with the requirements in ASTM Designation: B 117.

The third paragraph under "Mounting Assemblies" of Section 86-2.16, "Internally Illuminated Street Name Signs," of the Standard Specifications is amended to read:

- At least 16 feet of clearance shall be provided between the bottom of the fixture and the roadway.

The first paragraph of Section 86-4.01, "Vehicle Signal Faces," of the Standard Specifications is amended to read:

- Each vehicle signal face shall be of the adjustable type conforming to the requirements in Institute of Transportation Engineers (ITE) Publication: ST-017B, "Vehicle Traffic Control Signal Heads."

Subparagraphs 1 and 3 of the first paragraph of Section 86-4.01A, "Optical Units," of the Standard Specifications are amended to read:

- Lenses, reflectors, reflector assemblies, lamp receptacles, lamps, wiring and light distribution shall conform to the requirements in ITE Publication: ST-017B.

- All reflectors shall conform to the requirements in ITE Publication: ST-017B except that reflectors shall be made of silvered glass or of specular aluminum with an anodic coating. Reflector ring holder shall be made of cast aluminum.

The first paragraph of Section 86-4.01B, "Signal Sections," of the Standard Specifications is amended to read:

- Each signal section housing shall be either die-cast or permanent mold-cast aluminum conforming to ITE Publication: ST-017B or, when specified in the special provisions, shall be structural plastic.

The first paragraph of Section 86-4.01C, "Electrical Components," of the Standard Specifications is amended to read:

- Lamp receptacles and wiring shall conform to ITE Publication: ST-017B. The metal portion of the medium base lamp socket shall be brass, copper or phosphor bronze.

The first paragraph of Section 86-4.01D, "Visors," of the Standard Specifications is amended to read:

- Each signal section shall be provided with a removable visor conforming to the requirements in ITE Publication: ST-017B. Visors are classified, on the basis of lens enclosure, as full circle, tunnel (bottom open), or cap (bottom and lower sides open). Unless otherwise specified, visors shall be the tunnel type.

The first paragraph of Section 86-4.02A, "Physical and Mechanical Requirements," of the Standard Specifications is amended to read:

- Light emitting diode signal modules shall be designed as retrofit replacements for optical units of standard traffic signal sections and shall not require special tools for installation. Light emitting diode signal modules shall fit into existing traffic signal section housings built in conformance with the requirements in the Institute of Transportation Engineers (ITE) publication ST-017B, "Vehicle Traffic Control Signal Heads (VTCSH)" without modification to the housing.

The seventh paragraph of Section 86-4.02A, "Physical and Mechanical Requirements," of the Standard Specifications is amended to read:

- Light emitting diode signal modules shall be protected against dust and moisture intrusion in conformance with the requirements in NEMA Standard 250 for Type 4 enclosures to protect the internal components.

The first paragraph of Section 86-4.02B, "Photometric Requirements," of the Standard Specifications is amended to read:

- The minimum initial luminous intensity values for light emitting diode signal modules shall conform to the requirements in Section 11.04 of the Institute of Transportation Engineers (ITE) publication ST-017B, "Vehicle Traffic Control Signal Heads (VTCSH)" at 25°C.

The third paragraph of Section 86-4.02C, "Electrical," of the Standard Specifications is amended to read:

- The light emitting diode signal module on-board circuitry shall include voltage surge protection to withstand high-repetition noise transients as specified in Section 2.1.6 of NEMA Standard TS2.

Subparagraph 7 of the fourth paragraph of Section 86-4.02D(1), "Design Qualification Testing," of the Standard Specifications is amended to read:

  - Moisture resistance testing shall be performed on light emitting diode signal modules in conformance with the requirements in NEMA Standard 250 for Type 4 enclosures. Evidence of internal moisture after testing shall be cause for rejection.

The second paragraph of Section 86-4.05, "Programmed Visibility Vehicle Signal Faces," of the Standard Specifications is amended to read:

- Each programmed visibility signal section shall provide a nominal 300-mm diameter circular or arrow indication. Color and arrow configuration shall conform to the requirements in ITE Publication: ST-017B.

The first paragraph of Section 86-4.06, "Pedestrian Signal Faces" of the Standard Specifications is amended to read:

- Message symbols for pedestrian signal faces shall be white WALKING PERSON and Portland orange UPRAISED HAND conforming to the requirements in the Institute of Transportation Engineers Standards: "Pedestrian Traffic Control Signal Indications," "Manual on Uniform Traffic Control Devices," and "MUTCD California Supplement." The height of each symbol shall be not less than 250 mm and the width of each symbol shall be not less than 165 mm.

Subparagraph 3 of the first paragraph of Section 86-4.06A, "Types," of the Standard Specifications is amended to read:

- Each reflector assembly shall consist of a double reflector or 2 single reflectors. Each reflector shall be made of either aluminum or plastic. Reflectors shall conform to the requirements in Institute of Transportation Engineers Publication: ST-017B, "Vehicle Traffic Control Signal Heads." Plastic reflectors shall consist of molded or vacuum-formed plastic with a vacuum-deposited aluminum reflecting surface. The plastic material shall not distort when the reflector is used with the lamp of the wattage normally furnished with the signal. In addition, the UL nonmechanical loading temperature of the material shall exceed, by at least 10°C, the maximum temperature in the signal section with the lamp "ON" and measured in an ambient air temperature of 25°C in conformance with the requirements in UL Publication UL 746B. Each completed reflector shall, when operated with the appropriate lamp and lens, provide the message brightness specified.

The tenth paragraph of Section 86-4.07, "Light Emitting Diode Pedestrian Signal Face 'Upraised Hand' Module" of the Standard Specifications is amended to read:

- The luminance of the "UPRAISED HAND" symbol shall be 3750 cd/m^2 minimum. The color of "UPRAISED HAND" shall be Portland orange conforming to the requirements of the Institute of Transportation Engineers Standards: "Pedestrian Traffic Control Signal Indications," "Manual on Uniform Traffic Control Devices," and "MUTCD California Supplement." The height of each symbol shall be not less than 250 mm and the width of each symbol shall be not less than 165 mm.

The second paragraph of Section 86-4.07C, "Electrical," of the Standard Specifications is amended to read:

- On-board circuitry of the light emitting diode pedestrian signal modules shall include voltage surge protection to withstand high-repetition noise transients as stated in Section 2.1.6 of NEMA Standard TS2.

The second paragraph of Section 86-4.07D(1), "Design Qualification Testing," of the Standard Specifications is amended to read:

- A quantity of 2 units for each design shall be submitted for Design Qualification Testing. Test units shall be submitted to the Transportation Laboratory, after manufacturer's testing is complete.

Subparagraphs 5 and 7 of the fourth paragraph of Section 86-4.07D(1), "Design Qualification Testing," of the Standard Specifications are amended to read:

- Mechanical vibration testing shall be in conformance with the requirements in Military Specification MIL-STD-883, Test Method 2007, using three 4-minute cycles along each x, y and z axis, at a force

of 2.5 Gs, with a frequency sweep from 2 Hz to 120 Hz. The loosening of the lens or of internal components, or other physical damage shall be cause for rejection.

- Moisture resistance testing shall be performed on modules mounted in a standard pedestrian signal housing in conformance to the requirements in NEMA Standard 250 for Type 4 enclosures. Evidence of internal moisture after testing shall be cause for rejection.

The cone penetration, flow, and resilience requirements in the table in the second paragraph under "Hot-Melt Rubberized Asphalt Sealant" of Section 86-5.01A(5), "Installation Details," of the Standard Specifications is amended to read:

Cone Penetration, 25°C, 150 g, 5 s	D 5329, Sec. 6	3.5 mm, max.
Flow, 60°C	D 5329, Sec. 8	5 mm, max.
Resilience, 25°C	D 5329, Sec. 12	25%, min.

The third paragraph under "Mounting Assemblies" of Section 86-6.065, "Internally Illuminated Street Name Signs," of the Standard Specifications is amended to read:

- At least 4.9-m of clearance shall be provided between the bottom of the fixture and the roadway.

Section 86-8.01, "Payment," of the Standard Specifications is amended by adding the following paragraph after the first paragraph:

- If a portion or all of the poles for signal, lighting and electrical systems pursuant to Standard Specification Section 86, "Signals, Lighting and Electrical Systems," is fabricated more than 480 air line kilometers from both-Sacramento and Los Angeles, additional shop inspection expenses will be sustained by the State. Whereas it is and will be impracticable and extremely difficult to ascertain and determine the actual increase in such expenses, it is agreed that payment to the Contractor for furnishing such items from each fabrication site located more than 480 air line kilometers from both Sacramento and Los Angeles will be reduced $5000; in addition, in the case where a fabrication site is located more than 4800 air line kilometers from both Sacramento and Los Angeles, payment will be reduced an additional $3000 per each fabrication site ($8000 total per site).

SECTION 88: ENGINEERING FABRIC

Issue Date: January 15, 2002

Section 88-1.02, "Pavement Reinforcing Fabric," of the Standard Specifications is amended to read:

- Pavement reinforcing fabric shall be 100 percent polypropylene staple fiber fabric material, needle-punched, thermally bonded on one side, and conform to the following:

Specification	Requirement
Weight, grams per square meter ASTM Designation: D 5261	140
Grab tensile strength (25-mm grip), kilonewtons, min. in each direction ASTM Designation: D 4632	0.45
Elongation at break, percent min. ASTM Designation: D 4632	50
Asphalt retention by fabric, grams per square meter. (Residual Minimum) ASTM Designation: D 6140	900

Note: Weight, grab, elongation and asphalt retention are based on Minimum Average Roll Value (MARV)

SECTION 90: PORTLAND CEMENT CONCRETE

Issue Date: November 2, 2004

Section 90, "Portland Cement Concrete," of the Standard Specifications is amended to read:

SECTION 90: PORTLAND CEMENT CONCRETE
90-1 GENERAL

90-1.01 DESCRIPTION

- Portland cement concrete shall be composed of cementitious material, fine aggregate, coarse aggregate, admixtures if used, and water, proportioned and mixed as specified in these specifications.
- The Contractor shall determine the mix proportions for concrete in conformance with these specifications. Unless otherwise specified, cementitious material shall be a combination of cement and mineral admixture. Cementitious material shall be either:

1. "Type IP (MS) Modified" cement; or
2. A combination of "Type II Modified" portland cement and mineral admixture; or
3. A combination of Type V portland cement and mineral admixture.

- Type III portland cement shall be used only as allowed in the special provisions or with the approval of the Engineer.
- Class 1 concrete shall contain not less than 400 kg of cementitious material per cubic meter.
- Class 2 concrete shall contain not less than 350 kg of cementitious material per cubic meter.
- Class 3 concrete shall contain not less than 300 kg of cementitious material per cubic meter.
- Class 4 concrete shall contain not less than 250 kg of cementitious material per cubic meter.
- Minor concrete shall contain not less than 325 kg of cementitious material per cubic meter unless otherwise specified in these specifications or the special provisions.
- Unless otherwise designated on the plans or specified in these specifications or the special provisions, the amount of cementitious material used per cubic meter of concrete in structures or portions of structures shall conform to the following:

Use	Cementitious Material Content (kg/m3)
Concrete designated by compressive strength:	
Deck slabs and slab spans of bridges	400 min., 475 max.
Roof sections of exposed top box culverts	400 min., 475 max.
Other portions of structures	350 min., 475 max.
Concrete not designated by compressive strength:	
Deck slabs and slab spans of bridges	400 min.
Roof sections of exposed top box culverts	400 min.
Prestressed members	400 min.
Seal courses	400 min.
Other portions of structures	350 min.
Concrete for precast members	350 min., 550 max.

- Whenever the 28-day compressive strength shown on the plans is greater than 25 MPa, the concrete shall be designated by compressive strength. If the plans show a 28-day compressive strength that is 28 MPa or greater, an additional 14 days will be allowed to obtain the specified strength. The 28-day compressive strengths shown on the plans that are 25 MPa or less are shown for design information only and are not a requirement for acceptance of the concrete.
- Concrete designated by compressive strength shall be proportioned such that the concrete will attain the strength shown on the plans or specified in the special provisions.
- Before using concrete for which the mix proportions have been determined by the Contractor, or in advance of revising those mix proportions, the Contractor shall submit in writing to the Engineer a copy of the mix design.
- Compliance with cementitious material content requirements will be verified in conformance with procedures described in California Test 518 for cement content. For testing purposes, mineral admixture shall be considered to be cement. Batch proportions shall be adjusted as necessary to produce concrete having the specified cementitious material content.
- If any concrete has a cementitious material, portland cement, or mineral admixture content that is less than the minimum required, the concrete shall be removed. However, if the Engineer determines that the concrete is structurally adequate, the concrete may remain in place and the Contractor shall pay to the State $0.55 for each kilogram of cementitious material, portland cement, or mineral admixture that is less than the minimum required. The Department may deduct the amount from any moneys due, or that may become due, the Contractor under the contract. The deductions will not be made unless the difference between the contents required and those actually provided exceeds the batching tolerances permitted by Section 90-5, "Proportioning." No deductions will be made based on the results of California Test 518.
- The requirements of the preceding paragraph shall not apply to minor concrete or commercial quality concrete.

90-2 MATERIALS

90-2.01 CEMENT

- Unless otherwise specified, cement shall be either "Type IP (MS) Modified" cement, "Type II Modified" portland cement or Type V portland cement.
- "Type IP (MS) Modified" cement shall conform to the requirements for Type IP (MS) cement in ASTM Designation: C 595, and shall be comprised of an intimate and uniform blend of Type II cement and not more than 35 percent by mass of mineral admixture. The type and minimum amount of mineral admixture used in the manufacture of "Type IP (MS) Modified" cement shall be in conformance with the provisions in Section 90-4.08, "Required Use of Mineral Admixtures."
- "Type II Modified" portland cement shall conform to the requirements for Type II portland cement in ASTM Designation: C 150-02a.

- In addition, "Type IP (MS) Modified" cement and "Type II Modified" portland cement shall conform to the following requirements:

A. The cement shall not contain more than 0.60-percent by mass of alkalies, calculated as the percentage of Na_2O plus 0.658 times the percentage of K_2O, when determined by either direct intensity flame photometry or by the atomic absorption method. The instrument and procedure used shall be qualified as to precision and accuracy in conformance with the requirements in ASTM Designation: C 114;
B. The autoclave expansion shall not exceed 0.50-percent; and
C. Mortar, containing the cement to be used and Ottawa sand, when tested in conformance with California Test 527, shall not expand in water more than 0.010 percent and shall not contract in air more than 0.048 percent, except that when cement is to be used for precast prestressed concrete piling, precast prestressed concrete members, or steam cured concrete products, the mortar shall not contract in air more than 0.053 percent.

- Type III and Type V portland cements shall conform to the requirements in ASTM Designation: C 150-02a and the additional requirements listed above for "Type II Modified" portland cement, except that when tested in conformance with California Test 527, mortar containing Type III portland cement shall not contract in air more than 0.075 percent.
- Cement used in the manufacture of cast-in-place concrete for exposed surfaces of like elements of a structure shall be from the same cement mill.
- Cement shall be protected from exposure to moisture until used. Sacked cement shall be piled to permit access for tally, inspection, and identification of each shipment.
- Adequate facilities shall be provided to assure that cement meeting the provisions specified in this Section 90-2.01 shall be kept separate from other cement in order to prevent any but the specified cement from entering the work. Safe and suitable facilities for sampling cement shall be provided at the weigh hopper or in the feed line immediately in advance of the hopper, in conformance with California Test 125.
- If cement is used prior to sampling and testing as provided in Section 6-1.07, "Certificates of Compliance," and the cement is delivered directly to the site of the work, the Certificate of Compliance shall be signed by the cement manufacturer or supplier of the cement. If the cement is used in ready-mixed concrete or in precast concrete products purchased as such by the Contractor, the Certificate of Compliance shall be signed by the manufacturer of the concrete or product.
- Cement furnished without a Certificate of Compliance shall not be used in the work until the Engineer has had sufficient time to make appropriate tests and has approved the cement for use.

90-2.02 AGGREGATES

- Aggregates shall be free from deleterious coatings, clay balls, roots, bark, sticks, rags, and other extraneous material.
- Natural aggregates shall be thoroughly and uniformly washed before use.
- The Contractor, at the Contractor's expense, shall provide safe and suitable facilities, including necessary splitting devices for obtaining samples of aggregates, in conformance with California Test 125.
- Aggregates shall be of such character that it will be possible to produce workable concrete within the limits of water content provided in Section 90-6.06, "Amount of Water and Penetration."
- Aggregates shall have not more than 10 percent loss when tested for soundness in conformance with the requirements in California Test 214. The soundness requirement for fine aggregate will be waived, provided that the durability index, D_f, of the fine aggregate is 60, or greater, when tested for durability in conformance with California Test 229.
- If the results of any one or more of the Cleanness Value, Sand Equivalent, or aggregate grading tests do not meet the requirements specified for "Operating Range" but all meet the "Contract Compliance" requirements, the placement of concrete shall be suspended at the completion of the current pour until tests or

other information indicate that the next material to be used in the work will comply with the requirements specified for "Operating Range."

- If the results of either or both the Cleanness Value and coarse aggregate grading tests do not meet the requirements specified for "Contract Compliance," the concrete that is represented by the tests shall be removed. However, if the Engineer determines that the concrete is structurally adequate, the concrete may remain in place, and the Contractor shall pay to the State $4.60 per cubic meter for paving concrete and $7.20 per cubic meter for all other concrete for the concrete represented by these tests and left in place. The Department may deduct the amount from any moneys due, or that may become due, the Contractor under the contract.
- If the results of either or both the Sand Equivalent and fine aggregate grading tests do not meet the requirements specified for "Contract Compliance," the concrete which is represented by the tests shall be removed. However, if the Engineer determines that the concrete is structurally adequate, the concrete may remain in place, and the Contractor shall pay to the State $4.60 per cubic meter for paving concrete and $7.20 per cubic meter for all other concrete for the concrete represented by these tests and left in place. The Department may deduct the amount from any moneys due, or that may become due, the Contractor under the contract.
- The 2 preceding paragraphs apply individually to the "Contract Compliance" requirements for coarse aggregate and fine aggregate. When both coarse aggregate and fine aggregate do not conform to the "Contract Compliance" requirements, both paragraphs shall apply. The payments specified in those paragraphs shall be in addition to any payments made in conformance with the provisions in Section 90-1.01, "Description."
- No single Cleanness Value, Sand Equivalent or aggregate grading test shall represent more than 250 m^3 of concrete or one day's pour, whichever is smaller.
- When the source of an aggregate is changed, the Contractor shall adjust the mix proportions and submit in writing to the Engineer a copy of the mix design before using the aggregates.

90-2.02A Coarse Aggregate

- Coarse aggregate shall consist of gravel, crushed gravel, crushed rock, crushed air-cooled iron blast furnace slag or combinations thereof. Crushed air-cooled blast furnace slag shall not be used in reinforced or prestressed concrete.
- Coarse aggregate shall conform to the following quality requirements:

Tests	California Test	Requirements
Loss in Los Angeles Rattler (after 500 revolutions)	211	45% max.
Cleanness Value		
Operating Range	227	75 min.
Contract Compliance	227	71 min.

- In lieu of the above Cleanness Value requirements, a Cleanness Value "Operating Range" limit of 71, minimum, and a Cleanness Value "Contract Compliance" limit of 68, minimum, will be used to determine the acceptability of the coarse aggregate if the Contractor furnishes a Certificate of Compliance, as provided in Section 6-1.07, "Certificates of Compliance," certifying that:

1. coarse aggregate sampled at the completion of processing at the aggregate production plant had a Cleanness Value of not less than 82 when tested by California Test 227; and
2. prequalification tests performed in conformance with the requirements in California Test 549 indicated that the aggregate would develop a relative strength of not less than 95 percent and would have a relative shrinkage not greater than 105 percent, based on concrete.

90-2.02B Fine Aggregate

• Fine aggregate shall consist of natural sand, manufactured sand produced from larger aggregate or a combination thereof. Manufactured sand shall be well graded.

• Fine aggregate shall conform to the following quality requirements:

Test	California Test	Requirements
Organic Impurities	213	Satisfactory[a]
Mortar Strengths Relative to Ottawa Sand	515	95%, min.
Sand Equivalent:		
Operating Range	217	75, min.
Contract Compliance	217	71, min.

a Fine aggregate developing a color darker than the reference standard color solution may be accepted if it is determined by the Engineer, from mortar strength tests, that a darker color is acceptable.

• In lieu of the above Sand Equivalent requirements, a Sand Equivalent "Operating Range" limit of 71 minimum and a Sand Equivalent "Contract Compliance" limit of 68 minimum will be used to determine the acceptability of the fine aggregate if the Contractor furnishes a Certificate of Compliance, as provided in Section 6-1.07, "Certificates of Compliance," certifying that:

1. fine aggregate sampled at the completion of processing at the aggregate production plant had a Sand Equivalent value of not less than 82 when tested by California Test 217; and
2. prequalification tests performed in conformance with California Test 549 indicated that the aggregate would develop a relative strength of not less than 95 percent and would have a relative shrinkage not greater than 105 percent, based on concrete.

90-2.03 WATER

• In conventionally reinforced concrete work, the water for curing, for washing aggregates, and for mixing shall be free from oil and shall not contain more than 1000 parts per million of chlorides as Cl, when tested in conformance with California Test 422, nor more than 1300 parts per million of sulfates as SO_4, when tested in conformance with California Test 417. In prestressed concrete work, the water for curing, for washing aggregates, and for mixing shall be free from oil and shall not contain more than 650 parts per million of chlorides as Cl, when tested in conformance with California Test 422, nor more than 1300 parts per million of sulfates as SO_4, when tested in conformance with California Test 417. In no case shall the water contain an amount of impurities that will cause either: 1) a change in the setting time of cement of more than 25 percent when tested in conformance with the requirements in ASTM Designation: C 191 or ASTM Designation: C 266 or 2) a reduction in the compressive strength of mortar at 14 days of more than 5 percent, when tested in conformance with the requirements in ASTM Designation: C 109, when compared to the results obtained with distilled water or deionized water, tested in conformance with the requirements in ASTM Designation: C 109.

• In non-reinforced concrete work, the water for curing, for washing aggregates and for mixing shall be free from oil and shall not contain more than 2000 parts per million of chlorides as Cl, when tested in conformance with California Test 422, or more than 1500 parts per million of sulfates as SO_4, when tested in conformance with California Test 417.

• In addition to the above provisions, water for curing concrete shall not contain impurities in a sufficient amount to cause discoloration of the concrete or produce etching of the surface.

• Water reclaimed from mixer wash-out operations may be used in mixing concrete. The water shall not contain coloring agents or more than 300 parts per million of alkalis ($Na_2O + 0.658\ K_2O$) as determined on the

filtrate. The specific gravity of the water shall not exceed 1.03 and shall not vary more than ±0.010 during a day's operations.

90-2.04 ADMIXTURE MATERIALS

- Admixture materials shall conform to the requirements in the following ASTM Designations:

A. Chemical Admixtures—ASTM Designation: C 494.
B. Air-entraining Admixtures—ASTM Designation: C 260.
C. Calcium Chloride—ASTM Designation: D 98.
D. Mineral Admixtures—Coal fly ash; raw or calcined natural pozzolan as specified in ASTM Designation: C 618; silica fume conforming to the requirements in ASTM Designation: C 1240, with reduction of mortar expansion of 80 percent, minimum, using the cement from the proposed mix design.

- Unless otherwise specified in the special provisions, mineral admixtures shall be used in conformance with the provisions in Section 90-4.08, "Required Use of Mineral Admixtures."

90-3 AGGREGATE GRADINGS

90-3.01 GENERAL

- Before beginning concrete work, the Contractor shall submit in writing to the Engineer the gradation of the primary aggregate nominal sizes that the Contractor proposes to furnish. If a primary coarse aggregate or the fine aggregate is separated into 2 or more sizes, the proposed gradation shall consist of the gradation for each individual size, and the proposed proportions of each individual size, combined mathematically to indicate one proposed gradation. The proposed gradation shall meet the grading requirements shown in the table in this section, and shall show the percentage passing each of the sieve sizes used in determining the end result.
- The Engineer may waive, in writing, the gradation requirements in this Section 90-3.01 and in Sections 90-3.02, "Coarse Aggregate Grading," 90-3.03, "Fine Aggregate Grading," and 90-3.04, "Combined Aggregate Gradings," if, in the Engineer's opinion, furnishing the gradation is not necessary for the type or amount of concrete work to be constructed.
- Gradations proposed by the Contractor shall be within the following percentage passing limits:

Primary Aggregate Nominal Size	Sieve Size	Limits of Proposed Gradation
37.5-mm x 19-mm	25-mm	19 - 41
25-mm x 4.75-mm	19-mm	52 - 85
25-mm x 4.75-mm	9.5-mm	15 - 38
12.5-mm x 4.75-mm	9.5-mm	40 - 78
9.5-mm x 2.36-mm	9.5-mm	50 - 85
Fine Aggregate	1.18-mm	55 - 75
Fine Aggregate	600-µm	34 - 46
Fine Aggregate	300-µm	16 - 29

- Should the Contractor change the source of supply, the Contractor shall submit in writing to the Engineer the new gradations before their intended use.

90-3.02 COARSE AGGREGATE GRADING

- The grading requirements for coarse aggregates are shown in the following table for each size of coarse aggregate:

Sieve Sizes	Percentage Passing Primary Aggregate Nominal Sizes							
	37.5-mm x 19-mm		25-mm x 4.75-mm		12.5-mm x 4.75-mm		9.5-mm x 2.36-mm	
	Operating Range	Contract Compliance	Operating Range	Contract Compliance	Operating Range	Contract Compliance	Operating Range	Contract Compliance
50-mm	100	100	—	—	—	—	—	—
37.5-mm	88-100	85-100	100	100	—	—	—	—
25-mm	x ± 18	X ± 25	88-100	86-100	—	—	—	—
19-mm	0-17	0-20	X ± 15	X ± 22	100	100	—	—
12.5-mm	—	—	—	—	82-100	80-100	100	100
9.5-mm	0-7	0-9	X ± 15	X ± 22	X ± 15	X ± 22	X ± 15	X ± 20
4.75-mm	—	—	0-16	0-18	0-15	0-18	0-25	0-28
2.36-mm	—	—	0-6	0-7	0-6	0-7	0-6	0-7

- In the above table, the symbol X is the gradation that the Contractor proposes to furnish for the specific sieve size as provided in Section 90-3.01, "General."
- Coarse aggregate for the 37.5-mm, maximum, combined aggregate grading as provided in Section 90-3.04, "Combined Aggregate Gradings," shall be furnished in 2 or more primary aggregate nominal sizes. Each primary aggregate nominal size may be separated into 2 sizes and stored separately, provided that the combined material conforms to the grading requirements for that particular primary aggregate nominal size.
- When the 25-mm, maximum, combined aggregate grading as provided in Section 90-3.04, "Combined Aggregate Gradings," is to be used, the coarse aggregate may be separated into 2 sizes and stored separately, provided that the combined material shall conform to the grading requirements for the 25-mm x 4.75-mm primary aggregate nominal size.

90-3.03 FINE AGGREGATE GRADING

- Fine aggregate shall be graded within the following limits:

Sieve Sizes	Percentage Passing	
	Operating Range	Contract Compliance
9.5-mm	100	100
4.75-mm	95-100	93-100
2.36-mm	65-95	61-99
1.18-mm	X ± 10	X ± 13
600-µm	X ± 9	X ± 12
300-µm	X ± 6	X ± 9
150-µm	2-12	1-15
75-µm	0-8	0-10

- In the above table, the symbol X is the gradation that the Contractor proposes to furnish for the specific sieve size as provided in Section 90-3.01, "General."
- In addition to the above required grading analysis, the distribution of the fine aggregate sizes shall be such that the difference between the total percentage passing the 1.18-mm sieve and the total percentage passing the 600-µm sieve shall be between 10 and 40, and the difference between the percentage passing the 600-µm and 300-µm sieves shall be between 10 and 40.
- Fine aggregate may be separated into 2 or more sizes and stored separately, provided that the combined material conforms to the grading requirements specified in this Section 90-3.03.

90-3.04 COMBINED AGGREGATE GRADINGS

• Combined aggregate grading limits shall be used only for the design of concrete mixes. Concrete mixes shall be designed so that aggregates are combined in proportions that shall produce a mixture within the grading limits for combined aggregates as specified herein.

• The combined aggregate grading, except when otherwise specified in these specifications or the special provisions, shall be either the 37.5-mm, maximum grading, or the 25-mm, maximum grading, at the option of the Contractor.

Grading Limits of Combined Aggregates

Sieve Sizes	Percentage Passing			
	37.5-mm Max.	25-mm Max.	12.5-mm Max.	9.5-mm Max.
50-mm	100	—	—	—
37.5-mm	90-100	100	—	—
25-mm	50-86	90-100	—	—
19-mm	45-75	55-100	100	—
12.5-mm	—	—	90-100	100
9.5-mm	38-55	45-75	55-86	50 - 100
4.75-mm	30-45	35-60	45-63	45 - 63
2.36-mm	23-38	27-45	35-49	35 - 49
1.18-mm	17-33	20-35	25-37	25 - 37
600-µm	10-22	12-25	15-25	15 - 25
300-µm	4-10	5-15	5-15	5 - 15
150-µm	1-6	1-8	1-8	1 - 8
75-µm	0-3	0-4	0-4	0 - 4

• Changes from one grading to another shall not be made during the progress of the work unless permitted by the Engineer.

90-4 ADMIXTURES

90-4.01 GENERAL

• Admixtures used in portland cement concrete shall conform to and be used in conformance with the provisions in this Section 90-4 and the special provisions. Admixtures shall be used when specified or ordered by the Engineer and may be used at the Contractor's option as provided herein.

• Chemical admixtures and air-entraining admixtures containing chlorides as Cl in excess of one percent by mass of admixture, as determined by California Test 415, shall not be used in prestressed or reinforced concrete.

• Calcium chloride shall not be used in concrete except when otherwise specified.

• Mineral admixture used in concrete for exposed surfaces of like elements of a structure shall be from the same source and of the same percentage.

• Admixtures shall be uniform in properties throughout their use in the work. Should it be found that an admixture as furnished is not uniform in properties, its use shall be discontinued.

• If more than one admixture is used, the admixtures shall be compatible with each other so that the desirable effects of all admixtures used will be realized.

90-4.02 MATERIALS

• Admixture materials shall conform to the provisions in Section 90–2.04, "Admixture Materials."

90-4.03 ADMIXTURE APPROVAL

• No admixture brand shall be used in the work unless it is on the Department's current list of approved brands for the type of admixture involved.

• Admixture brands will be considered for addition to the approved list if the manufacturer of the admixture submits to the Transportation Laboratory a sample of the admixture accompanied by certified test results demonstrating that the admixture complies with the requirements in the appropriate ASTM Designation and these specifications. The sample shall be sufficient to permit performance of all required tests. Approval of admixture brands will be dependent upon a determination as to compliance with the requirements, based on the certified test results submitted, together with tests the Department may elect to perform.

• When the Contractor proposes to use an admixture of a brand and type on the current list of approved admixture brands, the Contractor shall furnish a Certificate of Compliance from the manufacturer, as provided in Section 6-1.07, "Certificates of Compliance," certifying that the admixture furnished is the same as that previously approved. If a previously approved admixture is not accompanied by a Certificate of Compliance, the admixture shall not be used in the work until the Engineer has had sufficient time to make the appropriate tests and has approved the admixture for use. The Engineer may take samples for testing at any time, whether or not the admixture has been accompanied by a Certificate of Compliance.

• If a mineral admixture is delivered directly to the site of the work, the Certificate of Compliance shall be signed by the manufacturer or supplier of the mineral admixture. If the mineral admixture is used in ready-mix concrete or in precast concrete products purchased as such by the Contractor, the Certificate of Compliance shall be signed by the manufacturer of the concrete or product.

90-4.04 REQUIRED USE OF CHEMICAL ADMIXTURES AND CALCIUM CHLORIDE

• When the use of a chemical admixture or calcium chloride is specified, the admixture shall be used at the dosage specified, except that if no dosage is specified, the admixture shall be used at the dosage normally recommended by the manufacturer of the admixture.

• Calcium chloride shall be dispensed in liquid, flake, or pellet form. Calcium chloride dispensed in liquid form shall conform to the provisions for dispensing liquid admixtures in Section 90-4.10, "Proportioning and Dispensing Liquid Admixtures."

90-4.05 OPTIONAL USE OF CHEMICAL ADMIXTURES

• The Contractor will be permitted to use Type A or F, water-reducing; Type B, retarding; or Type D or G, water-reducing and retarding admixtures as described in ASTM Designation: C 494 to conserve cementitious material or to facilitate any concrete construction application subject to the following conditions:

A. When a water-reducing admixture or a water-reducing and retarding admixture is used, the cementitious material content specified or ordered may be reduced by a maximum of 5 percent by mass, except that the resultant cementitious material content shall be not less than 300 kilograms per cubic meter; and
B. When a reduction in cementitious material content is made, the dosage of admixture used shall be the dosage used in determining approval of the admixture.

• Unless otherwise specified, a Type C accelerating chemical admixture conforming to the requirements in ASTM Designation: C 494, may be used in portland cement concrete. Inclusion in the mix design submitted for approval will not be required provided that the admixture is added to counteract changing conditions that contribute to delayed setting of the portland cement concrete, and the use or change in dosage of the admixture is approved in writing by the Engineer.

90-4.06 REQUIRED USE OF AIR-ENTRAINING ADMIXTURES

• When air-entrainment is specified or ordered by the Engineer, the air-entraining admixture shall be used in amounts to produce a concrete having the specified air content as determined by California Test 504.

90-4.07 OPTIONAL USE OF AIR-ENTRAINING ADMIXTURES

• When air-entrainment has not been specified or ordered by the Engineer, the Contractor will be permitted to use an air-entraining admixture to facilitate the use of any construction procedure or equipment provided that the average air content, as determined by California Test 504, of 3 successive tests does not exceed 4 percent, and no single test value exceeds 5.5 percent. If the Contractor elects to use an air-entraining admixture in concrete for pavement, the Contractor shall so indicate at the time the Contractor designates the source of aggregate as provided in Section 40-1.015, "Cement Content."

90-4.08 REQUIRED USE OF MINERAL ADMIXTURES

• Unless otherwise specified, mineral admixture shall be combined with cement to make cementitious material.

• The calcium oxide content shall not exceed 10 percent when determined in conformance with the requirements in ASTM Designation: C 114. The available alkali content (as sodium oxide equivalent) shall not exceed 1.5 percent when determined in conformance with the requirements in ASTM Designation: C 311, or the total alkali content (as sodium oxide equivalent) shall not exceed 5.0 percent when determined in conformance with the requirements in ASTM Designation: D 4326.

• The amounts of cement and mineral admixture used in cementitious material shall be sufficient to satisfy the minimum cementitious material content requirements specified in Section 90-1.01, "Description," or Section 90-4.05, "Optional Use of Chemical Admixtures," and shall conform to the following:

A. The minimum amount of cement shall not be less than 75 percent by mass of the specified minimum cementitious material content;
B. The minimum amount of mineral admixture to be combined with cement shall be determined using one of the following criteria:

    1. When the calcium oxide content of a mineral admixture is equal to or less than 2 percent by mass, the amount of mineral admixture shall not be less than 15 percent by mass of the total amount of cementitious material to be used in the mix;
    2. When the calcium oxide content of a mineral admixture is greater than 2 percent, the amount of mineral admixture shall not be less than 25 percent by mass of the total amount of cementitious material to be used in the mix;
    3. When a mineral admixture that conforms to the provisions for silica fume in Section 90-2.04, "Admixture Materials," is used, the amount of mineral admixture shall not be less than 10 percent by mass of the total amount of cementitious material to be used in the mix

C. The total amount of mineral admixture shall not exceed 35 percent by mass of the total amount of cementitious material to be used in the mix. Where Section 90-1.01, "Description," specifies a maximum cementitious content in kilograms per cubic meter, the total mass of cement and mineral admixture per cubic meter shall not exceed the specified maximum cementitious material content.

90-4.09 BLANK

90-4.10 PROPORTIONING AND DISPENSING LIQUID ADMIXTURES

• Chemical admixtures and air-entraining admixtures shall be dispensed in liquid form. Dispensers for liquid admixtures shall have sufficient capacity to measure at one time the prescribed quantity required for each batch of concrete. Each dispenser shall include a graduated measuring unit into which liquid admixtures are measured to within ±5 percent of the prescribed quantity for each batch. Dispensers shall be located and maintained so that the graduations can be accurately read from the point at which proportioning operations are

controlled to permit a visual check of batching accuracy prior to discharge. Each measuring unit shall be clearly marked for the type and quantity of admixture.

- Each liquid admixture dispensing system shall be equipped with a sampling device consisting of a valve located in a safe and readily accessible position such that a sample of the admixture may be withdrawn slowly by the Engineer.
- If more than one liquid admixture is used in the concrete mix, each liquid admixture shall have a separate measuring unit and shall be dispensed by injecting equipment located in such a manner that the admixtures are not mixed at high concentrations and do not interfere with the effectiveness of each other. When air-entraining admixtures are used in conjunction with other liquid admixtures, the air-entraining admixture shall be the first to be incorporated into the mix.
- When automatic proportioning devices are required for concrete pavement, dispensers for liquid admixtures shall operate automatically with the batching control equipment. The dispensers shall be equipped with an automatic warning system in good operating condition that will provide a visible or audible signal at the point at which proportioning operations are controlled when the quantity of admixture measured for each batch of concrete varies from the preselected dosage by more than 5 percent, or when the entire contents of the measuring unit are not emptied from the dispenser into each batch of concrete.
- Unless liquid admixtures are added to premeasured water for the batch, their discharge into the batch shall be arranged to flow into the stream of water so that the admixtures are well dispersed throughout the batch, except that air-entraining admixtures may be dispensed directly into moist sand in the batching bins provided that adequate control of the air content of the concrete can be maintained.
- Liquid admixtures requiring dosages greater than 2.5 L/m^3 shall be considered to be water when determining the total amount of free water as specified in Section 90-6.06, "Amount of Water and Penetration."
- Special admixtures, such as "high range" water reducers that may contribute to a high rate of slump loss, shall be measured and dispensed as recommended by the admixture manufacturer and as approved by the Engineer.

90-4.11 STORAGE, PROPORTIONING, AND DISPENSING OF MINERAL ADMIXTURES

- Mineral admixtures shall be protected from exposure to moisture until used. Sacked material shall be piled to permit access for tally, inspection and identification for each shipment.
- Adequate facilities shall be provided to assure that mineral admixtures meeting the specified requirements are kept separate from other mineral admixtures in order to prevent any but the specified mineral admixtures from entering the work. Safe and suitable facilities for sampling mineral admixtures shall be provided at the weigh hopper or in the feed line immediately in advance of the hopper.
- Mineral admixtures shall be incorporated into concrete using equipment conforming to the requirements for cement weigh hoppers, and charging and discharging mechanisms in ASTM Designation: C 94, in Section 90-5.03, "Proportioning," and in this Section 90-4.11.
- When concrete is completely mixed in stationary paving mixers, the mineral admixture shall be weighed in a separate weigh hopper conforming to the provisions for cement weigh hoppers and charging and discharging mechanisms in Section 90-5.03A, "Proportioning for Pavement," and the mineral admixture and cement shall be introduced simultaneously into the mixer proportionately with the aggregate. If the mineral admixture is not weighed in a separate weigh hopper, the Contractor shall provide certification that the stationary mixer is capable of mixing the cement, admixture, aggregates and water uniformly prior to discharge. Certification shall contain the following:

A. Test results for 2 compressive strength test cylinders of concrete taken within the first one-third and 2 compressive strength test cylinders of concrete taken within the last one-third of the concrete discharged from a single batch from the stationary paving mixer. Strength tests and cylinder preparation will be in conformance with the provisions of Section 90-9, "Compressive Strength;"

B. Calculations demonstrating that the difference in the averages of 2 compressive strengths taken in the first one-third is no greater than 7.5 percent different than the averages of 2 compressive strengths taken in the last one-third of the concrete discharged from a single batch from the stationary paving mixer. Strength tests and cylinder preparation will be in conformance with the provisions of Section 90-9, "Compressive Strength;" and
C. The mixer rotation speed and time of mixing prior to discharge that are required to produce a mix that meets the requirements above.

90-5 PROPORTIONING

90-5.01 STORAGE OF AGGREGATES

• Aggregates shall be stored or stockpiled in such a manner that separation of coarse and fine particles of each size shall be avoided and also that the various sizes shall not become intermixed before proportioning.

• Aggregates shall be stored or stockpiled and handled in a manner that shall prevent contamination by foreign materials. In addition, storage of aggregates at batching or mixing facilities that are erected subsequent to the award of the contract and that furnish concrete to the project shall conform to the following:

A. Intermingling of the different sizes of aggregates shall be positively prevented. The Contractor shall take the necessary measures to prevent intermingling. The preventive measures may include, but are not necessarily limited to, physical separation of stockpiles or construction of bulkheads of adequate length and height; and
B. Contamination of aggregates by contact with the ground shall be positively prevented. The Contractor shall take the necessary measures to prevent contamination. The preventive measures shall include, but are not necessarily limited to, placing aggregates on wooden platforms or on hardened surfaces consisting of portland cement concrete, asphalt concrete, or cement treated material.

• In placing aggregates in storage or in moving the aggregates from storage to the weigh hopper of the batching plant, any method that may cause segregation, degradation, or the combining of materials of different gradings that will result in any size of aggregate at the weigh hopper failing to meet the grading requirements, shall be discontinued. Any method of handling aggregates that results in excessive breakage of particles shall be discontinued. The use of suitable devices to reduce impact of falling aggregates may be required by the Engineer.

90-5.02 PROPORTIONING DEVICES

• Weighing, measuring, or metering devices used for proportioning materials shall conform to the requirements in Section 9-1.01, "Measurement of Quantities," and this Section 90-5.02. In addition, automatic weighing systems shall comply with the requirements for automatic proportioning devices in Section 90-5.03A, "Proportioning for Pavement." Automatic devices shall be automatic to the extent that the only manual operation required for proportioning the aggregates, cement, and mineral admixture for one batch of concrete is a single operation of a switch or starter.

• Proportioning devices shall be tested at the expense of the Contractor as frequently as the Engineer may deem necessary to ensure their accuracy.

• Weighing equipment shall be insulated against vibration or movement of other operating equipment in the plant. When the plant is in operation, the mass of each batch of material shall not vary from the mass designated by the Engineer by more than the tolerances specified herein.

• Equipment for cumulative weighing of aggregate shall have a zero tolerance of ±0.5 percent of the designated total batch mass of the aggregate. For systems with individual weigh hoppers for the various sizes of aggregate, the zero tolerance shall be ±0.5 percent of the individual batch mass designated for each size of aggregate. Equipment for cumulative weighing of cement and mineral admixtures shall have a zero tolerance of

±0.5 percent of the designated total batch mass of the cement and mineral admixture. Equipment for weighing cement or mineral admixture separately shall have a zero tolerance of ±0.5 percent of their designated individual batch masses. Equipment for measuring water shall have a zero tolerance of ±0.5 percent of its designated mass or volume.

- The mass indicated for any batch of material shall not vary from the preselected scale setting by more than the following:

A. Aggregate weighed cumulatively shall be within 1.0 percent of the designated total batch mass of the aggregate. Aggregates weighed individually shall be within 1.5 percent of their respective designated batch masses; and
B. Cement shall be within 1.0 percent of its designated batch mass. When weighed individually, mineral admixture shall be within 1.0 percent of its designated batch mass. When mineral admixture and cement are permitted to be weighed cumulatively, cement shall be weighed first to within 1.0 percent of its designated batch mass, and the total for cement and mineral admixture shall be within 1.0 percent of the sum of their designated batch masses; and
C. Water shall be within 1.5 percent of its designated mass or volume.

- Each scale graduation shall be approximately 0.001 of the total capacity of the scale. The capacity of scales for weighing cement, mineral admixture, or cement plus mineral admixture and aggregates shall not exceed that of commercially available scales having single graduations indicating a mass not exceeding the maximum permissible mass variation above, except that no scale shall be required having a capacity of less than 500 kg, with 0.5-kg graduations.

90-5.03 PROPORTIONING

- Proportioning shall consist of dividing the aggregates into the specified sizes, each stored in a separate bin, and combining them with cement, mineral admixture, and water as provided in these specifications. Aggregates shall be proportioned by mass.
- At the time of batching, aggregates shall have been dried or drained sufficiently to result in a stable moisture content such that no visible separation of water from aggregate will take place during transportation from the proportioning plant to the point of mixing. In no event shall the free moisture content of the fine aggregate at the time of batching exceed 8 percent of its saturated, surface-dry mass.
- Should separate supplies of aggregate material of the same size group, but of different moisture content or specific gravity or surface characteristics affecting workability, be available at the proportioning plant, withdrawals shall be made from one supply exclusively and the materials therein completely exhausted before starting upon another.
- Bulk "Type IP (MS) Modified" cement shall be weighed in an individual hopper and shall be kept separate from the aggregates until the ingredients are released for discharge into the mixer.
- Bulk cement and mineral admixture may be weighed in separate, individual weigh hoppers or may be weighed in the same weigh hopper and shall be kept separate from the aggregates until the ingredients are released for discharge into the mixer. If the cement and mineral admixture are weighed cumulatively, the cement shall be weighed first.
- When cement and mineral admixtures are weighed in separate weigh hoppers**,** the weigh systems for the proportioning of the aggregate, the cement, and the mineral admixture shall be individual and distinct from all other weigh systems. Each weigh system shall be equipped with a hopper, a lever system, and an indicator to constitute an individual and independent material weighing device. The cement and the mineral admixture shall be discharged into the mixer simultaneously with the aggregate.
- The scales and weigh hoppers for bulk weighing cement, mineral admixture, or cement plus mineral admixture shall be separate and distinct from the aggregate weighing equipment.

- For batches with a volume of one cubic meter or more, the batching equipment shall conform to one of the following combinations:

A. Separate boxes and separate scale and indicator for weighing each size of aggregate.
B. Single box and scale indicator for all aggregates.
C. Single box or separate boxes and automatic weighing mechanism for all aggregates.

- In order to check the accuracy of batch masses, the gross mass and tare mass of batch trucks, truck mixers, truck agitators, and non-agitating hauling equipment shall be determined when ordered by the Engineer. The equipment shall be weighed at the Contractor's expense on scales designated by the Engineer.

90-5.03A Proportioning for Pavement

- Aggregates and bulk cement, mineral admixture, and cement plus mineral admixture for use in pavement shall be proportioned by mass by means of automatic proportioning devices of approved type conforming to these specifications.
- The Contractor shall install and maintain in operating condition an electronically actuated moisture meter that will indicate, on a readily visible scale, changes in the moisture content of the fine aggregate as it is batched within a sensitivity of 0.5 percent by mass of the fine aggregate.
- The batching of cement, mineral admixture, or cement plus mineral admixture and aggregate shall be interlocked so that a new batch cannot be started until all weigh hoppers are empty, the proportioning devices are within zero tolerance, and the discharge gates are closed. The interlock shall permit no part of the batch to be discharged until all aggregate hoppers and the cement and mineral admixture hoppers or the cement plus mineral admixture hopper are charged with masses that are within the tolerances specified in Section 90-5.02, "Proportioning Devices."
- When interlocks are required for cement and mineral admixture charging mechanisms and cement and mineral admixtures are weighed cumulatively, their charging mechanisms shall be interlocked to prevent the introduction of mineral admixture until the mass of cement in the cement weigh hopper is within the tolerances specified in Section 90-5.02, "Proportioning Devices."
- The discharge gate on the cement and mineral admixture hoppers or the cement plus mineral admixture hopper shall be designed to permit regulating the flow of cement, mineral admixture, or cement plus mineral admixture into the aggregate as directed by the Engineer.
- When separate weigh boxes are used for each size of aggregate, the discharge gates shall permit regulating the flow of each size of aggregate as directed by the Engineer.
- Material discharged from the several bins shall be controlled by gates or by mechanical conveyors. The means of withdrawal from the several bins, and of discharge from the weigh box, shall be interlocked so that not more than one bin can discharge at a time, and so that the weigh box cannot be tripped until the required quantity from each of the several bins has been deposited therein. Should a separate weigh box be used for each size of aggregate, all may be operated and discharged simultaneously.
- When the discharge from the several bins is controlled by gates, each gate shall be actuated automatically so that the required mass is discharged into the weigh box, after which the gate shall automatically close and lock.
- The automatic weighing system shall be designed so that all proportions required may be set on the weighing controller at the same time.

90-6 MIXING AND TRANSPORTING

90-6.01 GENERAL

- Concrete shall be mixed in mechanically operated mixers, except that when permitted by the Engineer, batches not exceeding 0.25 m^3 may be mixed by hand methods in conformance with the provisions in Section 90-6.05, "Hand-Mixing."
- Equipment having components made of aluminum or magnesium alloys that would have contact with plastic concrete during mixing, transporting, or pumping of portland cement concrete shall not be used.
- Concrete shall be homogeneous and thoroughly mixed, and there shall be no lumps or evidence of undispersed cement, mineral admixture, or cement plus mineral admixture.
- Uniformity of concrete mixtures will be determined by differences in penetration as determined by California Test 533, or slump as determined by ASTM Designation: C 143, and by variations in the proportion of coarse aggregate as determined by California Test 529.
- When the mix design specifies a penetration value, the difference in penetration, determined by comparing penetration tests on 2 samples of mixed concrete from the same batch or truck mixer load, shall not exceed 10 mm. When the mix design specifies a slump value, the difference in slump, determined by comparing slump tests on 2 samples of mixed concrete from the same batch or truck mixer load, shall not exceed the values given in the table below. Variation in the proportion of coarse aggregate will be determined by comparing the results of tests of 2 samples of mixed concrete from the same batch or truck mixer load and the difference between the 2 results shall not exceed 100 kg per cubic meter of concrete.

Average Slump	Maximum Permissible Difference
Less than 100-mm	25-mm
100-mm to 150-mm	38-mm
Greater than 150-mm to 225-mm	50-mm

- The Contractor, at the Contractor's expense, shall furnish samples of the freshly mixed concrete and provide satisfactory facilities for obtaining the samples.

90-6.02 MACHINE MIXING

- Concrete mixers may be of the revolving drum or the revolving blade type, and the mixing drum or blades shall be operated uniformly at the mixing speed recommended by the manufacturer. Mixers and agitators that have an accumulation of hard concrete or mortar shall not be used.
- The temperature of mixed concrete, immediately before placing, shall be not less than 10°C or more than 32°C. Aggregates and water shall be heated or cooled as necessary to produce concrete within these temperature limits. Neither aggregates nor mixing water shall be heated to exceed 65°C. If ice is used to cool the concrete, discharge of the mixer will not be permitted until all ice is melted.
- The batch shall be so charged into the mixer that some water will enter in advance of cementitious materials and aggregates. All water shall be in the drum by the end of the first one-fourth of the specified mixing time.
- Cementitious materials shall be batched and charged into the mixer by means that will not result either in loss of cementitious materials due to the effect of wind, in accumulation of cementitious materials on surfaces of conveyors or hoppers, or in other conditions that reduce or vary the required quantity of cementitious material in the concrete mixture.
- Paving and stationary mixers shall be operated with an automatic timing device. The timing device and discharge mechanism shall be interlocked so that during normal operation no part of the batch will be discharged until the specified mixing time has elapsed.
- The total elapsed time between the intermingling of damp aggregates and all cementitious materials and the start of mixing shall not exceed 30 minutes.
- The size of batch shall not exceed the manufacturer's guaranteed capacity.

- When producing concrete for pavement or base, suitable batch counters shall be installed and maintained in good operating condition at jobsite batching plants and stationary mixers. The batch counters shall indicate the exact number of batches proportioned and mixed.
- Concrete shall be mixed and delivered to the jobsite by means of one of the following combinations of operations:

A. Mixed completely in a stationary mixer and the mixed concrete transported to the point of delivery in truck agitators or in non-agitating hauling equipment (central-mixed concrete).
B. Mixed partially in a stationary mixer, and the mixing completed in a truck mixer (shrink-mixed concrete).
C. Mixed completely in a truck mixer (transit-mixed concrete).
D. Mixed completely in a paving mixer.

- Agitators may be truck mixers operating at agitating speed or truck agitators. Each mixer and agitator shall have attached thereto in a prominent place a metal plate or plates on which is plainly marked the various uses for which the equipment is designed, the manufacturer's guaranteed capacity of the drum or container in terms of the volume of mixed concrete and the speed of rotation of the mixing drum or blades.
- Truck mixers shall be equipped with electrically or mechanically actuated revolution counters by which the number of revolutions of the drum or blades may readily be verified.
- When shrink-mixed concrete is furnished, concrete that has been partially mixed at a central plant shall be transferred to a truck mixer and all requirements for transit-mixed concrete shall apply. No credit in the number of revolutions at mixing speed shall be allowed for partial mixing in a central plant.

90-6.03 TRANSPORTING MIXED CONCRETE

- Mixed concrete may be transported to the delivery point in truck agitators or truck mixers operating at the speed designated by the manufacturer of the equipment as agitating speed, or in non-agitating hauling equipment, provided the consistency and workability of the mixed concrete upon discharge at the delivery point is suitable for adequate placement and consolidation in place, and provided the mixed concrete after hauling to the delivery point conforms to the provisions in Section 90-6.01, "General."
- Truck agitators shall be loaded not to exceed the manufacturer's guaranteed capacity and shall maintain the mixed concrete in a thoroughly mixed and uniform mass during hauling.
- Bodies of non-agitating hauling equipment shall be constructed so that leakage of the concrete mix, or any part thereof, will not occur at any time.
- Concrete hauled in open-top vehicles shall be protected during hauling against rain or against exposure to the sun for more than 20 minutes when the ambient temperature exceeds 24°C.
- No additional mixing water shall be incorporated into the concrete during hauling or after arrival at the delivery point, unless authorized by the Engineer. If the Engineer authorizes additional water to be incorporated into the concrete, the drum shall be revolved not less than 30 revolutions at mixing speed after the water is added and before discharge is commenced.
- The rate of discharge of mixed concrete from truck mixer-agitators shall be controlled by the speed of rotation of the drum in the discharge direction with the discharge gate fully open.
- When a truck mixer or agitator is used for transporting concrete to the delivery point, discharge shall be completed within 1.5 hours or before 250 revolutions of the drum or blades, whichever occurs first, after the introduction of the cement to the aggregates. Under conditions contributing to quick stiffening of the concrete, or when the temperature of the concrete is 30°C or above, the time allowed may be less than 1.5 hours.
- When non-agitating hauling equipment is used for transporting concrete to the delivery point, discharge shall be completed within one hour after the addition of the cement to the aggregates. Under conditions contributing to quick stiffening of the concrete, or when the temperature of the concrete is 30°C or above, the time between the introduction of cement to the aggregates and discharge shall not exceed 45 minutes.

- Each load of concrete delivered at the jobsite shall be accompanied by a weighmaster certificate showing the mix identification number, non-repeating load number, date and time at which the materials were batched, the total amount of water added to the load, and for transit-mixed concrete, the reading of the revolution counter at the time the truck mixer is charged with cement. This weighmaster certificate shall also show the actual scale masses (kilograms) for the ingredients batched. Theoretical or target batch masses shall not be used as a substitute for actual scale masses.
- Weighmaster certificates shall be provided in printed form, or if approved by the Engineer, the data may be submitted in electronic media. Electronic media shall be presented in a tab-delimited format on a 90 mm diskette with a capacity of at least 1.4 megabytes. Captured data, for the ingredients represented by each batch shall be "line feed, carriage return" (LFCR) and "one line, separate record" with allowances for sufficient fields to satisfy the amount of data required by these specifications.
- The Contractor may furnish a weighmaster certificate accompanied by a separate certificate that lists the actual batch masses or measurements for a load of concrete provided that both certificates are imprinted with the same non-repeating load number that is unique to the contract and delivered to the jobsite with the load.
- Weighmaster certificates furnished by the Contractor shall conform to the provisions in Section 9-1.01, "Measurement of Quantities."

90-6.04 TIME OR AMOUNT OF MIXING

- Mixing of concrete in paving or stationary mixers shall continue for the required mixing time after all ingredients, except water and admixture, if added with the water, are in the mixing compartment of the mixer before any part of the batch is released. Transfer time in multiple drum mixers shall not be counted as part of the required mixing time.
- The required mixing time, in paving or stationary mixers, of concrete used for concrete structures, except minor structures, shall be not less than 90 seconds or more than 5 minutes, except that when directed by the Engineer in writing, the requirements of the following paragraph shall apply.
- The required mixing time, in paving or stationary mixers, except as provided in the preceding paragraph, shall be not less than 50 seconds or more than 5 minutes.
- The minimum required revolutions at the mixing speed for transit-mixed concrete shall not be less than that recommended by the mixer manufacturer, but in no case shall the number of revolutions be less than that required to consistently produce concrete conforming to the provisions for uniformity in Section 90-6.01, "General."

90-6.05 HAND-MIXING

- Hand-mixed concrete shall be made in batches of not more than 0.25 m^3 and shall be mixed on a watertight, level platform. The proper amount of coarse aggregate shall be measured in measuring boxes and spread on the platform and the fine aggregate shall be spread on this layer, the 2 layers being not more than 0.3 meters in total depth. On this mixture shall be spread the dry cement and mineral admixture and the whole mass turned no fewer than 2 times dry; then sufficient clean water shall be added, evenly distributed, and the whole mass again turned no fewer than 3 times, not including placing in the carriers or forms.

90-6.06 AMOUNT OF WATER AND PENETRATION

- The amount of water used in concrete mixes shall be regulated so that the penetration of the concrete as determined by California Test 533 or the slump of the concrete as determined by ASTM Designation: C 143 is within the "Nominal" values shown in the following table. When the penetration or slump of the concrete is found to exceed the nominal values listed, the mixture of subsequent batches shall be adjusted to reduce the penetration or slump to a value within the nominal range shown. Batches of concrete with a penetration or slump exceeding the maximum values listed shall not be used in the work. When Type F or Type G chemical admixtures are added to the mix, the penetration requirements shall not apply and the slump shall not exceed 225 mm after the chemical admixtures are added.

Type of Work	Nominal		Maximum	
	Penetration (mm)	Slump (mm)	Penetration (mm)	Slump (mm)
Concrete Pavement	0-25	—	40	—
Non-reinforced concrete facilities	0-35	—	50	—
Reinforced concrete structures				
Sections over 300-mm thick	0-35	—	65	—
Sections 300-mm thick or less	0-50	—	75	—
Concrete placed under water	—	150-200	—	225
Cast-in-place concrete piles	65-90	130-180	100	200

- The amount of free water used in concrete shall not exceed 183 kg/m^3, plus 20 kg for each required 100 kg of cementitious material in excess of 325 kg/m^3.
- The term free water is defined as the total water in the mixture minus the water absorbed by the aggregates in reaching a saturated surface-dry condition.
- Where there are adverse or difficult conditions that affect the placing of concrete, the above specified penetration and free water content limitations may be exceeded providing the Contractor is granted permission by the Engineer in writing to increase the cementitious material content per cubic meter of concrete. The increase in water and cementitious material shall be at a ratio not to exceed 30 kg of water per added 100 kg of cementitious material per cubic meter. The cost of additional cementitious material and water added under these conditions shall be at the Contractor's expense and no additional compensation will be allowed therefor.
- The equipment for supplying water to the mixer shall be constructed and arranged so that the amount of water added can be measured accurately. Any method of discharging water into the mixer for a batch shall be accurate within 1.5 percent of the quantity of water required to be added to the mix for any position of the mixer. Tanks used to measure water shall be designed so that water cannot enter while water is being discharged into the mixer and discharge into the mixer shall be made rapidly in one operation without dribbling. All equipment shall be arranged so as to permit checking the amount of water delivered by discharging into measured containers.

90-7 CURING CONCRETE

90-7.01 METHODS OF CURING

- Newly placed concrete shall be cured by the methods specified in this Section 90-7.01 and the special provisions.

90-7.01A Water Method

- The concrete shall be kept continuously wet by the application of water for a minimum curing period of 7 days after the concrete has been placed.
- When a curing medium consisting of cotton mats, rugs, carpets, or earth or sand blankets is to be used to retain the moisture, the entire surface of the concrete shall be kept damp by applying water with a nozzle that so atomizes the flow that a mist and not a spray is formed, until the surface of the concrete is covered with the curing medium. The moisture from the nozzle shall not be applied under pressure directly upon the concrete and shall not be allowed to accumulate on the concrete in a quantity sufficient to cause a flow or wash the surface. At the expiration of the curing period, the concrete surfaces shall be cleared of all curing mediums.
- At the option of the Contractor, a curing medium consisting of white opaque polyethylene sheeting extruded onto burlap may be used to cure concrete structures. The polyethylene sheeting shall have a minimum thickness of 100 µm, and shall be extruded onto 283.5 gram burlap.

- At the option of the Contractor, a curing medium consisting of polyethylene sheeting may be used to cure concrete columns. The polyethylene sheeting shall have a minimum thickness of 250 µm achieved in a single layer of material.
- If the Contractor chooses to use polyethylene sheeting or polyethylene sheeting on burlap as a curing medium as specified above, these mediums and any joints therein shall be secured as necessary to provide moisture retention and shall be within 75 mm of the concrete at all points along the surface being cured. When these mediums are used, the temperature of the concrete shall be monitored during curing. If the temperature of the concrete cannot be maintained below 60°C, this method of curing shall be discontinued, and one of the other curing methods allowed for the concrete shall be used.
- When concrete bridge decks and flat slabs are to be cured without the use of a curing medium, the entire surface of the bridge deck or slab shall be kept damp by the application of water with an atomizing nozzle as specified in the preceding paragraph, until the concrete has set, after which the entire surface of the concrete shall be sprinkled continuously with water for a period of not less than 7 days.

90-7.01B Curing Compound Method

- Surfaces of the concrete that are exposed to the air shall be sprayed uniformly with a curing compound.
- Curing compounds to be used shall be as follows:

1. Pigmented curing compound conforming to the requirements in ASTM Designation: C 309, Type 2, Class B, except the resin type shall be poly-alpha-methylstyrene.
2. Pigmented curing compound conforming to the requirements in ASTM Designation: C 309, Type 2, Class B.
3. Pigmented curing compound conforming to the requirements in ASTM Designation: C 309, Type 2, Class A.
4. Non-pigmented curing compound conforming to the requirements in ASTM Designation: C 309, Type 1, Class B.
5. Non-pigmented curing compound conforming to the requirements in ASTM Designation: C 309, Type 1, Class A.
6. Non-pigmented curing compound with fugitive dye conforming to the requirements in ASTM Designation: C 309, Type 1-D, Class A.

- The infrared scan for the dried vehicle from curing compound (1) shall match the infrared scan on file at the Transportation Laboratory.
- The loss of water for each type of curing compound, when tested in conformance with the requirements in California Test 534, shall not be more than 0.15-kg/m^2 in 24 hours.
- The curing compound to be used will be specified elsewhere in these specifications or in the special provisions.
- When the use of curing compound is required or permitted elsewhere in these specifications or in the special provisions and no specific kind is specified, any of the curing compounds listed above may be used.
- Curing compound shall be applied at a nominal rate of 3.7 m^2/L, unless otherwise specified.
- At any point, the application rate shall be within ±1.2 m^2/L of the nominal rate specified, and the average application rate shall be within ±0.5 m^2/L of the nominal rate specified when tested in conformance with the requirements in California Test 535. Runs, sags, thin areas, skips, or holidays in the applied curing compound shall be evidence that the application is not satisfactory.
- Curing compounds shall be applied using power operated spray equipment. The power operated spraying equipment shall be equipped with an operational pressure gage and a means of controlling the pressure. Hand spraying of small and irregular areas that are not reasonably accessible to mechanical spraying equipment, in the opinion of the Engineer, may be permitted.

- The curing compound shall be applied to the concrete following the surface finishing operation, immediately before the moisture sheen disappears from the surface, but before any drying shrinkage or craze cracks begin to appear. In the event of any drying or cracking of the surface, application of water with an atomizing nozzle as specified in Section 90-7.01A, "Water Method," shall be started immediately and shall be continued until application of the compound is resumed or started; however, the compound shall not be applied over any resulting freestanding water. Should the film of compound be damaged from any cause before the expiration of 7 days after the concrete is placed in the case of structures and 72 hours in the case of pavement, the damaged portion shall be repaired immediately with additional compound.
- At the time of use, compounds containing pigments shall be in a thoroughly mixed condition with the pigment uniformly dispersed throughout the vehicle. A paddle shall be used to loosen all settled pigment from the bottom of the container, and a power driven agitator shall be used to disperse the pigment uniformly throughout the vehicle.
- Agitation shall not introduce air or other foreign substance into the curing compound.
- The manufacturer shall include in the curing compound the necessary additives for control of sagging, pigment settling, leveling, de-emulsification, or other requisite qualities of a satisfactory working material. Pigmented curing compounds shall be manufactured so that the pigment does not settle badly, does not cake or thicken in the container, and does not become granular or curdled. Settlement of pigment shall be a thoroughly wetted, soft, mushy mass permitting the complete and easy vertical penetration of a paddle. Settled pigment shall be easily redispersed, with minimum resistance to the sideways manual motion of the paddle across the bottom of the container, to form a smooth uniform product of the proper consistency.
- Curing compounds shall remain sprayable at temperatures above 4°C and shall not be diluted or altered after manufacture.
- The curing compound shall be packaged in clean 1040-L totes, 210-L barrels

or 19-L pails shall be supplied from a suitable storage tank located at the jobsite. The containers shall comply with "Title 49, Code of Federal Regulations, Hazardous Materials Regulations." The 1040-L totes and the 210-L barrels shall have removable lids and airtight fasteners. The 19-L pails shall be round and have standard full open head and bail. Lids with bungholes shall not be permitted. Settling or separation of solids in containers, except tanks, must be completely redispersed with low speed mixing prior to use, in conformance with these specifications and the manufacturer's recommendations. Mixing shall be accomplished either manually by use of a paddle or by use of a mixing blade driven by a drill motor, at low speed. Mixing blades shall be the type used for mixing paint. On site storage tanks shall be kept clean and free of contaminants. Each tank shall have a permanent system designed to completely redisperse settled material without introducing air or other foreign substances.

- Steel containers and lids shall be lined with a coating that will prevent destructive action by the compound or chemical agents in the air space above the compound. The coating shall not come off the container or lid as skins. Containers shall be filled in a manner that will prevent skinning. Plastic containers shall not react with the compound.
- Each container shall be labeled with the manufacturer's name, kind of curing compound, batch number, volume, date of manufacture, and volatile organic compound (VOC) content. The label shall also warn that the curing compound containing pigment shall be well stirred before use. Precautions concerning the handling and the application of curing compound shall be shown on the label of the curing compound containers in conformance with the Construction Safety Orders and General Industry Safety Orders of the State of California.
- Containers of curing compound shall be labeled to indicate that the contents fully comply with the rules and regulations concerning air pollution control in the State of California.
- When the curing compound is shipped in tanks or tank trucks, a shipping invoice shall accompany each load. The invoice shall contain the same information as that required herein for container labels.
- Curing compound will be sampled by the Engineer at the source of supply or at the jobsite or at both locations.

- Curing compound shall be formulated so as to maintain the specified properties for a minimum of one year. The Engineer may require additional testing before use to determine compliance with these specifications if the compound has not been used within one year or whenever the Engineer has reason to believe the compound is no longer satisfactory.
- Tests will be conducted in conformance with the latest ASTM test methods and methods in use by the Transportation Laboratory.

90-7.01C Waterproof Membrane Method

- The exposed finished surfaces of concrete shall be sprayed with water, using a nozzle that so atomizes the flow that a mist and not a spray is formed, until the concrete has set, after which the curing membrane shall be placed. The curing membrane shall remain in place for a period of not less than 72 hours.
- Sheeting material for curing concrete shall conform to the requirements in AASHTO Designation: M 171 for white reflective materials.
- The sheeting material shall be fabricated into sheets of such width as to provide a complete cover for the entire concrete surface. Joints in the sheets shall be securely cemented together in such a manner as to provide a waterproof joint. The joint seams shall have a minimum lap of 100 mm.
- The sheets shall be securely weighted down by placing a bank of earth on the edges of the sheets or by other means satisfactory to the Engineer.
- Should any portion of the sheets be broken or damaged before the expiration of 72 hours after being placed, the broken or damaged portions shall be immediately repaired with new sheets properly cemented into place.
- Sections of membrane that have lost their waterproof qualities or have been damaged to such an extent as to render them unfit for curing the concrete shall not be used.

90-7.01D Forms-In-Place Method

- Formed surfaces of concrete may be cured by retaining the forms in place. The forms shall remain in place for a minimum period of 7 days after the concrete has been placed, except that for members over 0.5-m in least dimension the forms shall remain in place for a minimum period of 5 days.
- Joints in the forms and the joints between the end of forms and concrete shall be kept moisture tight during the curing period. Cracks in the forms and cracks between the forms and the concrete shall be resealed by methods subject to the approval of the Engineer.

90-7.02 CURING PAVEMENT

- The entire exposed area of the pavement, including edges, shall be cured by the waterproof membrane method, or curing compound method using curing compound (1) or (2) as the Contractor may elect. Should the side forms be removed before the expiration of 72 hours following the start of curing, the exposed pavement edges shall also be cured. If the pavement is cured by means of the curing compound method, the sawcut and all portions of the curing compound that have been disturbed by sawing operations shall be restored by spraying with additional curing compound.
- Curing shall commence as soon as the finishing process provided in Section 40-1.10, "Final Finishing," has been completed. The method selected shall conform to the provisions in Section 90-7.01, "Methods of Curing."
- When the curing compound method is used, the compound shall be applied to the entire pavement surface by mechanical sprayers. Spraying equipment shall be of the fully atomizing type equipped with a tank agitator that provides for continual agitation of the curing compound during the time of application. The spray shall be adequately protected against wind, and the nozzles shall be so oriented or moved mechanically transversely as to result in the minimum specified rate of coverage being applied uniformly on exposed faces. Hand spraying of small and irregular areas, and areas inaccessible to mechanical spraying equipment, in the opinion of the Engineer, will be permitted. When the ambient air temperature is above 15°C, the Contractor

shall fog the surface of the concrete with a fine spray of water as specified in Section 90-7.01A, "Water Method." The surface of the pavement shall be kept moist between the hours of 10:00 a.m. and 4:30 p.m. on the day the concrete is placed. However, the fogging done after the curing compound has been applied shall not begin until the compound has set sufficiently to prevent displacement. Fogging shall be discontinued if ordered in writing by the Engineer.

90-7.03 CURING STRUCTURES

- Newly placed concrete for cast-in-place structures, other than highway bridge decks, shall be cured by the water method, the forms-in-place method, or, as permitted herein, by the curing compound method, in conformance with the provisions in Section 90-7.01, "Methods of Curing."
- The curing compound method using a pigmented curing compound may be used on concrete surfaces of construction joints, surfaces that are to be buried underground, and surfaces where only Ordinary Surface Finish is to be applied and on which a uniform color is not required and that will not be visible from a public traveled way. If the Contractor elects to use the curing compound method on the bottom slab of box girder spans, the curing compound shall be curing compound (1).
- The top surface of highway bridge decks shall be cured by both the curing compound method and the water method. The curing compound shall be curing compound (1).
- Concrete surfaces of minor structures, as defined in Section 51-1.02, "Minor Structures," shall be cured by the water method, the forms-in-place method or the curing compound method.
- When deemed necessary by the Engineer during periods of hot weather, water shall be applied to concrete surfaces being cured by the curing compound method or by the forms-in-place method, until the Engineer determines that a cooling effect is no longer required. Application of water for this purpose will be paid for as extra work as provided in Section 4-1.03D, "Extra Work."

90-7.04 CURING PRECAST CONCRETE MEMBERS

- Precast concrete members shall be cured in conformance with any of the methods specified in Section 90-7.01, "Methods of Curing." Curing shall be provided for the minimum time specified for each method or until the concrete reaches its design strength, whichever is less. Steam curing may also be used for precast members and shall conform to the following provisions:

A. After placement of the concrete, members shall be held for a minimum 4-hour presteaming period. If the ambient air temperature is below 10°C, steam shall be applied during the presteaming period to hold the air surrounding the member at a temperature between 10°C and 32°C.
B. To prevent moisture loss on exposed surfaces during the presteaming period, members shall be covered as soon as possible after casting or the exposed surfaces shall be kept wet by fog spray or wet blankets.
C. Enclosures for steam curing shall allow free circulation of steam about the member and shall be constructed to contain the live steam with a minimum moisture loss. The use of tarpaulins or similar flexible covers will be permitted, provided they are kept in good repair and secured in such a manner as to prevent the loss of steam and moisture.
D. Steam at the jets shall be at low pressure and in a saturated condition. Steam jets shall not impinge directly on the concrete, test cylinders, or forms. During application of the steam, the temperature rise within the enclosure shall not exceed 22°C per hour. The curing temperature throughout the enclosure shall not exceed 65°C and shall be maintained at a constant level for a sufficient time necessary to develop the required transfer strength. Control cylinders shall be covered to prevent moisture loss and shall be placed in a location where temperature is representative of the average temperature of the enclosure.
E. Temperature recording devices that will provide an accurate, continuous, permanent record of the curing temperature shall be provided. A minimum of one temperature recording device per 60 m of continuous bed length will be required for checking temperature.

F. Members in pretension beds shall be detensioned immediately after the termination of steam curing while the concrete and forms are still warm, or the temperature under the enclosure shall be maintained above 15°C until the stress is transferred to the concrete.
G. Curing of precast concrete will be considered completed after termination of the steam curing cycle.

90-7.05 CURING PRECAST PRESTRESSED CONCRETE PILES

• Newly placed concrete for precast prestressed concrete piles shall be cured in conformance with the provisions in Section 90-7.04, "Curing Precast Concrete Members," except that piles in a corrosive environment shall be cured as follows:

A. Piles shall be either steam cured or water cured. If water curing is used, the piles shall be kept continuously wet by the application of water in conformance with the provisions in Section 90-7.01A, "Water Method."
B. If steam curing is used, the steam curing provisions in Section 90-7.04, "Curing Precast Concrete Members," shall apply except that the piles shall be kept continuously wet for their entire length for a period of not less than 3 days, including the holding and steam curing periods.

90-7.06 CURING SLOPE PROTECTION

• Concrete slope protection shall be cured in conformance with any of the methods specified in Section 90-7.01, "Methods of Curing."

• Concreted-rock slope protection shall be cured in conformance with any of the methods specified in Section 90-7.01, "Methods of Curing," or with a blanket of earth kept wet for 72 hours, or by sprinkling with a fine spray of water every 2 hours during the daytime for a period of 3 days.

90-7.07 CURING MISCELLANEOUS CONCRETE WORK

• Exposed surfaces of curbs shall be cured by pigmented curing compounds as specified in Section 90-7.01B, "Curing Compound Method."

• Concrete sidewalks, gutter depressions, island paving, curb ramps, driveways, and other miscellaneous concrete areas shall be cured in conformance with any of the methods specified in Section 90-7.01, "Methods of Curing."

• Shotcrete shall be cured for at least 72 hours by spraying with water, or by a moist earth blanket, or by any of the methods provided in Section 90-7.01, "Methods of Curing."

• Mortar and grout shall be cured by keeping the surface damp for 3 days.

• After placing, the exposed surfaces of sign structure foundations, including pedestal portions, if constructed, shall be cured for at least 72 hours by spraying with water, or by a moist earth blanket, or by any of the methods provided in Section 90-7.01, "Methods of Curing."

90-8 PROTECTING CONCRETE

90-8.01 GENERAL

• In addition to the provisions in Section 7-1.16, "Contractor's Responsibility for the Work and Materials," the Contractor shall protect concrete as provided in this Section 90-8.

• Concrete shall not be placed on frozen or ice-coated ground or subgrade nor on ice-coated forms, reinforcing steel, structural steel, conduits, precast members, or construction joints.

• Under rainy conditions, placing of concrete shall be stopped before the quantity of surface water is sufficient to damage surface mortar or cause a flow or wash of the concrete surface, unless the Contractor provides adequate protection against damage.

• Concrete that has been frozen or damaged by other causes, as determined by the Engineer, shall be removed and replaced by the Contractor at the Contractor's expense.

90-8.02 PROTECTING CONCRETE STRUCTURES

• Structure concrete and shotcrete used as structure concrete shall be maintained at a temperature of not less than 7°C for 72 hours after placing and at not less than 4°C for an additional 4 days. When required by the Engineer, the Contractor shall submit a written outline of the proposed methods for protecting the concrete.

90-8.03 PROTECTING CONCRETE PAVEMENT

• Pavement concrete shall be maintained at a temperature of not less than 4°C for 72 hours. When required by the Engineer, the Contractor shall submit a written outline of the proposed methods for protecting the concrete.

• Except as provided in Section 7-1.08, "Public Convenience," the Contractor shall protect concrete pavement against construction and other activities that abrade, scar, discolor, reduce texture depth, lower coefficient of friction, or otherwise damage the surface. Stockpiling, drifting, or excessive spillage of soil, gravel, petroleum products, and concrete or asphalt mixes on the surface of concrete pavement is prohibited unless otherwise specified in these specifications, the special provisions or permitted by the Engineer.

• When ordered by the Engineer or shown on the plans or specified in the special provisions, pavement crossings shall be constructed for the convenience of public traffic. The material and work necessary for the construction of the crossings, and their subsequent removal and disposal, will be paid for at the contract unit prices for the items of work involved and if there are no contract items for the work involved, payment for pavement crossings will be made by extra work as provided in Section 4-1.03D, "Extra Work.". Where public traffic will be required to cross over the new pavement, Type III portland cement may be used in concrete, if permitted in writing by the Engineer. The pavement may be opened to traffic as soon as the concrete has developed a modulus of rupture of 3.8 MPa. The modulus of rupture will be determined by California Test 523.

• No traffic or Contractor's equipment, except as hereinafter provided, will be permitted on the pavement before a period of 10 days has elapsed after the concrete has been placed, nor before the concrete has developed a modulus of rupture of at least 3.8 MPa. Concrete that fails to attain a modulus of rupture of 3.8 MPa within 10 days shall not be opened to traffic until directed by the Engineer.

• Equipment for sawing weakened plane joints will be permitted on the pavement as specified in Section 40-1.08B, "Weakened Plane Joints."

• When requested in writing by the Contractor, the tracks on one side of paving equipment will be permitted on the pavement after a modulus of rupture of 2.4 MPa has been attained, provided that:

A. Unit pressure exerted on the pavement by the paver shall not exceed 135 kPa;
B. Tracks with cleats, grousers, or similar protuberances shall be modified or shall travel on planks or equivalent protective material, so that the pavement is not damaged; and
C. No part of the track shall be closer than 0.3-m from the edge of pavement.

• In case of visible cracking of, or other damage to the pavement, operation of the paving equipment on the pavement shall be immediately discontinued.

• Damage to the pavement resulting from early use of pavement by the Contractor's equipment as provided above shall be repaired by the Contractor at the Contractor's expense.

• The State will furnish the molds and machines for testing the concrete for modulus of rupture, and the Contractor, at the Contractor's expense, shall furnish the material and whatever labor the Engineer may require.

90-9 COMPRESSIVE STRENGTH

90-9.01 GENERAL

- Concrete compressive strength requirements consist of a minimum strength that shall be attained before various loads or stresses are applied to the concrete and, for concrete designated by strength, a minimum strength at the age of 28 days or at the age otherwise allowed in Section 90-1.01, "Description." The various strengths required are specified in these specifications or the special provisions or are shown on the plans.
- The compressive strength of concrete will be determined from test cylinders that have been fabricated from concrete sampled in conformance with the requirements of California Test 539. Test cylinders will be molded and initially field cured in conformance with California Test 540. Test cylinders will be cured and tested after receipt at the testing laboratory in conformance with the requirements of California Test 521. A strength test shall consist of the average strength of 2 cylinders fabricated from material taken from a single load of concrete, except that, if any cylinder should show evidence of improper sampling, molding, or testing, that cylinder shall be discarded and the strength test shall consist of the strength of the remaining cylinder.
- When concrete compressive strength is specified as a prerequisite to applying loads or stresses to a concrete structure or member, test cylinders for other than steam cured concrete will be cured in conformance with Method 1 of California Test 540. The compressive strength of concrete determined for these purposes will be evaluated on the basis of individual tests.
- When concrete is designated by 28-day compressive strength rather than by cementitious material content, the concrete strength to be used as a basis for acceptance of other than steam cured concrete will be determined from cylinders cured in conformance with Method 1 of California Test 540. If the result of a single compressive strength test at the maximum age specified or allowed is below the specified strength but is 95 percent or more of the specified strength, the Contractor shall, at the Contractor's expense, make corrective changes, subject to approval of the Engineer, in the mix proportions or in the concrete fabrication procedures, before placing additional concrete, and shall pay to the State $14 for each in-place cubic meter of concrete represented by the deficient test. If the result of a single compressive strength test at the maximum age specified or allowed is below 95 percent of the specified strength, but is 85 percent or more of the specified strength, the Contractor shall make the corrective changes specified above, and shall pay to the State $20 for each in place cubic meter of concrete represented by the deficient test. In addition, such corrective changes shall be made when the compressive strength of concrete tested at 7 days indicates, in the judgment of the Engineer, that the concrete will not attain the required compressive strength at the maximum age specified or allowed. Concrete represented by a single test that indicates a compressive strength of less than 85 percent of the specified 28-day compressive strength will be rejected in conformance with the provisions in Section 6-1.04, "Defective Materials."
- If the test result indicates that the compressive strength at the maximum curing age specified or allowed is below the specified strength, but is 85 percent or more of the specified strength, payments to the State as required above shall be made, unless the Contractor, at the Contractor's expense, obtains and submits evidence acceptable to the Engineer that the strength of the concrete placed in the work meets or exceeds the specified 28-day compressive strength. If the test result indicates a compressive strength at the maximum curing age specified or allowed below 85 percent, the concrete represented by that test will be rejected, unless the Contractor, at the Contractor's expense, obtains and submits evidence acceptable to the Engineer that the strength and quality of the concrete placed in the work are acceptable. If the evidence consists of tests made on cores taken from the work, the cores shall be obtained and tested in conformance with the requirements in ASTM Designation: C 42.
- No single compressive strength test shall represent more than 250 m^3.
- When a precast concrete member is steam cured, the compressive strength of the concrete will be determined from test cylinders that have been handled and stored in conformance with Method 3 of California Test 540. The compressive strength of steam cured concrete will be evaluated on the basis of individual tests representing specific portions of production. When the concrete is designated by 28-day compressive strength rather than by cementitious material content, the concrete shall be considered to be acceptable whenever its

compressive strength reaches the specified 28-day compressive strength provided that strength is reached in not more than the maximum number of days specified or allowed after the member is cast.

- When concrete is specified by compressive strength, prequalification of materials, mix proportions, mixing equipment, and procedures proposed for use will be required prior to placement of the concrete. Prequalification shall be accomplished by the submission of acceptable certified test data or trial batch reports by the Contractor. Prequalification data shall be based on the use of materials, mix proportions, mixing equipment, procedures, and size of batch proposed for use in the work.
- Certified test data, in order to be acceptable, shall indicate that not less than 90 percent of at least 20 consecutive tests exceed the specified strength at the maximum number of cure days specified or allowed, and none of those tests are less than 95 percent of specified strength. Strength tests included in the data shall be the most recent tests made on concrete of the proposed mix design and all shall have been made within one year of the proposed use of the concrete.
- Trial batch test reports, in order to be acceptable, shall indicate that the average compressive strength of 5 consecutive concrete cylinders, taken from a single batch, at not more than 28 days (or the maximum age allowed) after molding shall be at least 4 MPa greater than the specified 28-day compressive strength, and no individual cylinder shall have a strength less than the specified strength at the maximum age specified or allowed. Data contained in the report shall be from trial batches that were produced within one year of the proposed use of specified strength concrete in the project. Whenever air-entrainment is required, the air content of trial batches shall be equal to or greater than the air content specified for the concrete without reduction due to tolerances.
- Tests shall be performed in conformance with either the appropriate California Test methods or the comparable ASTM test methods. Equipment employed in testing shall be in good condition and shall be properly calibrated. If the tests are performed during the life of the contract, the Engineer shall be notified sufficiently in advance of performing the tests in order to witness the test procedures.
- The certified test data and trial batch test reports shall include the following information:

A. Date of mixing.
B. Mixing equipment and procedures used.
C. The size of batch in cubic meters and the mass, type, and source of all ingredients used.
D. Penetration of the concrete.
E. The air content of the concrete if an air-entraining admixture is used.
F. The age at time of testing and strength of all concrete cylinders tested.

- Certified test data and trial batch test reports shall be signed by an official of the firm that performed the tests.
- When approved by the Engineer, concrete from trial batches may be used in the work at locations where concrete of a lower quality is required and the concrete will be paid for as the type or class of concrete required at that location.
- After materials, mix proportions, mixing equipment, and procedures for concrete have been prequalified for use, additional prequalification by testing of trial batches will be required prior to making changes that, in the judgment of the Engineer, could result in a strength of concrete below that specified.
- The Contractor's attention is directed to the time required to test trial batches and the Contractor shall be responsible for production of trial batches at a sufficiently early date so that the progress of the work is not delayed.
- When precast concrete members are manufactured at the plant of an established manufacturer of precast concrete members, the mix proportions of the concrete shall be determined by the Contractor, and a trial batch and prequalification of the materials, mix proportions, mixing equipment, and procedures will not be required.

90-10 MINOR CONCRETE

90-10.01 GENERAL

- Concrete for minor structures, slope paving, curbs, sidewalks and other concrete work, when designated as minor concrete on the plans, in the specifications, or in the contract item, shall conform to the provisions specified herein.
- The Engineer, at the Engineer's discretion, will inspect and test the facilities, materials and methods for producing the concrete to ensure that minor concrete of the quality suitable for use in the work is obtained.

90-10.02 MATERIALS

- Minor concrete shall conform to the following requirements:

90-10.02A Cementitious Material

- Cementitious material shall conform to the provisions in Section 90-1.01, "Description."

90-10.02B Aggregate

- Aggregate shall be clean and free from deleterious coatings, clay balls, roots, and other extraneous materials.
- The Contractor shall submit to the Engineer for approval, a grading of the combined aggregate proposed for use in the minor concrete. After acceptance of the grading, aggregate furnished for minor concrete shall conform to that grading, unless a change is authorized in writing by the Engineer.
- The Engineer may require the Contractor to furnish periodic test reports of the aggregate grading furnished. The maximum size of aggregate used shall be at the option of the Contractor, but in no case shall the maximum size be larger than 37.5 mm or smaller than 19 mm.
- The Engineer may waive, in writing, the gradation requirements in this Section 90-10.02B, if, in the Engineer's opinion, the furnishing of the gradation is not necessary for the type or amount of concrete work to be constructed.

90-10.02C Water

- Water used for washing, mixing, and curing shall be free from oil, salts, and other impurities that would discolor or etch the surface or have an adverse affect on the quality of the concrete.

90-10.02D Admixtures

- The use of admixtures shall conform to the provisions in Section 90-4, "Admixtures."

90-10.03 PRODUCTION

- Cementitious material, water, aggregate, and admixtures shall be stored, proportioned, mixed, transported, and discharged in conformance with recognized standards of good practice that will result in concrete that is thoroughly and uniformly mixed, that is suitable for the use intended, and that conforms to requirements specified herein. Recognized standards of good practice are outlined in various industry publications such as are issued by American Concrete Institute, AASHTO, or the Department.
- The cementitious material content of minor concrete shall conform to the provisions in Section 90-1.01, "Description."
- The amount of water used shall result in a consistency of concrete conforming to the provisions in Section 90-6.06, "Amount of Water and Penetration." Additional mixing water shall not be incorporated into the concrete during hauling or after arrival at the delivery point, unless authorized by the Engineer.
- Discharge of ready-mixed concrete from the transporting vehicle shall be made while the concrete is still plastic and before stiffening occurs. An elapsed time of 1.5 hours (one hour in non-agitating hauling

equipment), or more than 250 revolutions of the drum or blades, after the introduction of the cementitious material to the aggregates, or a temperature of concrete of more than 32°C will be considered conditions contributing to the quick stiffening of concrete. The Contractor shall take whatever action is necessary to eliminate quick stiffening, except that the addition of water will not be permitted.

- The required mixing time in stationary mixers shall be not less than 50 seconds or more than 5 minutes.
- The minimum required revolutions at mixing speed for transit-mixed concrete shall be not less than that recommended by the mixer manufacturer, and shall be increased, if necessary, to produce thoroughly and uniformly mixed concrete.
- Each load of ready-mixed concrete shall be accompanied by a weighmaster certificate that shall be delivered to the Engineer at the discharge location of the concrete, unless otherwise directed by the Engineer. The weighmaster certificate shall be clearly marked with the date and time of day when the load left the batching plant and, if hauled in truck mixers or agitators, the time the mixing cycle started.
- A Certificate of Compliance conforming to the provisions in Section 6–1.07, "Certificates of Compliance," shall be furnished to the Engineer, prior to placing minor concrete from a source not previously used on the contract, stating that minor concrete to be furnished meets contract requirements, including minimum cementitious material content specified.

90-10.04 CURING MINOR CONCRETE

- Curing minor concrete shall conform to the provisions in Section 90-7, "Curing Concrete."

90-10.05 PROTECTING MINOR CONCRETE

- Protecting minor concrete shall conform to the provisions in Section 90-8, "Protecting Concrete," except the concrete shall be maintained at a temperature of not less than 4°C for 72 hours after placing.

90-10.06 MEASUREMENT AND PAYMENT

- Minor concrete will be measured and paid for in conformance with the provisions specified in the various sections of these specifications covering concrete construction when minor concrete is specified in the specifications, shown on the plans, or indicated by contract item in the Engineer's Estimate.

90-11 MEASUREMENT AND PAYMENT

90-11.01 MEASUREMENT

- Portland cement concrete will be measured in conformance with the provisions specified in the various sections of these specifications covering construction requiring concrete.
- When it is provided that concrete will be measured at the mixer, the volume in cubic meters shall be computed as the total mass of the batch in kilograms divided by the density of the concrete in kilograms per cubic meter. The total mass of the batch shall be calculated as the sum of all materials, including water, entering the batch. The density of the concrete will be determined in conformance with the requirements in California Test 518.

90-11.02 PAYMENT

- Portland cement concrete will be paid for in conformance with the provisions specified in the various sections of these specifications covering construction requiring concrete.
- Full compensation for furnishing and incorporating admixtures required by these specifications or the special provisions will be considered as included in the contract prices paid for the concrete involved and no additional compensation will be allowed therefor.

• Should the Engineer order the Contractor to incorporate any admixtures in the concrete when their use is not required by these specifications or the special provisions, furnishing the admixtures and adding them to the concrete will be paid for as extra work as provided in Section 4-1.03D, "Extra Work."

• Should the Contractor use admixtures in conformance with the provisions in Section 90-4.05, "Optional Use of Chemical Admixtures," or Section 90-4.07, "Optional Use of Air-entraining Admixtures," or should the Contractor request and obtain permission to use other admixtures for the Contractor's benefit, the Contractor shall furnish those admixtures and incorporate them into the concrete at the Contractor's expense and no additional compensation will be allowed therefor.

SECTION 91: PAINT

Issue Date: November 18, 2005

Section 91-3, "Paints for Timber," of the Standard Specifications is amended to read:

91-3 PAINTS FOR TIMBER

91-3.01 WOOD PRIMER, LATEX-BASE

Classification:

• This specification covers a ready-mixed priming paint for use on unpainted wood or exterior woodwork. It shall conform with the requirements in the Detailed Performance Standards of the Master Painters Institute (MPI) for exterior wood primers, and be listed on the Exterior Latex Wood Primer MPI List Number 6.

91-3.02 PAINT; LATEX-BASE FOR EXTERIOR WOOD, WHITE AND TINTS

Classification:

• This specification covers a ready-mixed paint for use on wood surfaces subject to outside exposures. This paint shall conform to the requirements in the Detailed Performance Standards of the Master Painters Institute (MPI) for Paint, Latex, Exterior, and shall be listed on the following MPI Approved Products List:

A. Exterior Latex, Flat MPI Gloss Level 1, MPI List Number 10.
B. Exterior Latex, Semi-Gloss, MPI Gloss Level 5, MPI List Number 11.
C. Exterior Latex, Gloss, MPI Gloss Level 6, MPI List Number 119.

• Unpainted wood shall first be primed with wood primer conforming to the provisions in Section 91-3.01, "Wood Primer, Latex-Base."

Section 91-4, "Miscellaneous Paints," of the Standard Specifications is amended to read:

91-4 MISCELLANEOUS PAINTS

91-4.01 THROUGH 91-4.04 (BLANK)

91-4.05 PAINT; ACRYLIC EMULSION, EXTERIOR WHITE AND LIGHT AND MEDIUM TINTS

Classification:

• This specification covers an acrylic emulsion paint designed for use on exterior masonry. This paint shall conform to the requirements in the Detailed Performance Standards of the Master Painters Institute (MPI) for Paint, Latex, Exterior, and shall be listed on the following MPI Approved Products Lists:

A. Exterior Latex, Flat MPI Gloss Level 1, MPI List Number 10.
B. Exterior Latex, Semi-Gloss, MPI Gloss Level 5, MPI List Number 11.

C. Exterior Latex, Gloss, MPI Gloss Level 6, MPI List Number 119.

- This paint may be tinted by using "universal" or "all purpose" concentrates.

SECTION 92: ASPHALTS

Issue Date: November 18, 2005

Section 92, "Asphalts," of the Standard Specifications is amended to read:

92-1.01 DESCRIPTION

- Asphalt shall consist of refined petroleum or a mixture of refined liquid asphalt and refined solid asphalt, prepared from crude petroleum. Asphalt shall be:

A. Free from residues caused by the artificial distillation of coal, coal tar, or paraffin.
B. Free from water.
C. Homogeneous.

92-1.02 MATERIALS

92-1.02(A) General

- The Contractor shall furnish asphalt under the Department's "Certification Program for Suppliers of Asphalt." The Department maintains the program requirements, procedures, and a list of approved suppliers at:

http://www.dot.ca.gov/hq/esc/Translab/fpmcoc.htm

- The Contractor shall ensure the safe transportation, storage, use, and disposal of asphalt.
- The Contractor shall prevent the formation of carbonized particles caused by overheating asphalt during manufacturing or construction.

92-1.02(B) Grades

- Performance graded (PG) asphalt binder shall conform to the following:

Performance Graded Asphalt Binder

Property	AASHTO Test Method	Specification Grade				
		PG 58-22 [a]	PG 64-10	PG 64-16	PG 64-28	PG 70-10
Original Binder						
Flash Point, Minimum °C	T48	230	230	230	230	230
Solubility, Minimum % [b]	T44	99	99	99	99	99
Viscosity at 135°C, [c] Maximum, Pa·s	T316	3.0	3.0	3.0	3.0	3.0
Dynamic Shear, Test Temp. at 10 rad/s, °C	T315	58	64	64	64	70
Minimum G*/sin(delta), kPa		1.00	1.00	1.00	1.00	1.00
RTFO Test, [e] Mass Loss, Maximum, %	T240	1.00	1.00	1.00	1.00	1.00
RTFO Test Aged Binder						
Dynamic Shear, Test Temp. at 10 rad/s, °C	T315	58	64	64	64	70
Minimum G*/sin(delta), kPa		2.20	2.20	2.20	2.20	2.20
Ductility at 25°C Minimum, cm	T51	75	75	75	75	75
PAV [f] Aging, Temperature, °C	R28	100	100	100	100	110
RTFO Test and PAV Aged Binder						
Dynamic Shear, Test Temp. at 10 rad/s, °C	T315	22 [d]	31 [d]	28 [d]	22 [d]	34 [d]
Maximum G*/sin(delta), kPa		5000	5000	5000	5000	5000
Creep Stiffness, Test Temperature, °C	T313	-12	0	-6	-18	0
Maximum S-value, Mpa		300	300	300	300	300
Minimum M-value		0.300	0.300	0.300	0.300	0.300

Notes:

a. For use as asphalt rubber base stock for high mountain and high desert area.
b. The Engineer will waive this specification if the supplier is a Quality Supplier as defined by the Department's "Certification Program for Suppliers of Asphalt."
c. The Engineer will waive this specification if the supplier certifies the asphalt binder can be adequately pumped and mixed at temperatures meeting applicable safety standards.
d. Test the sample at 3°C higher if it fails at the specified test temperature. G*sin(delta) shall remain 5000 kPa maximum.
e. "RTFO Test" means the asphaltic residue obtained using the Rolling Thin Film Oven Test, AASHTO Test Method T240 or ASTM Designation: D 2872.
f. "PAV" means Pressurized Aging Vessel.

- Performance based asphalt (PBA) binder shall conform to the following:

Performance Based Asphalt Binder

Property	AASHTO Test Method	Specification Grade PBA 6a	PBA 6a(mod)	PBA 6b	PBA 7
Absolute Viscosity (60°C), Pa·s(x10^{-1})[a]	T202				
Original Binder, Minimum		2000	2000	2000	1100
RTFO Aged Residue [b], Minimum		5000	5000	5000	3000
Kinematic Viscosity (135°C), m^2/s(x10^{-6})	T201				
Original Binder, Maximum		2000	2000	2000	2000
RTFO Aged Residue, Minimum		275	275	275	275
Absolute Viscosity Ratio (60°C), Maximum RTFO Test Visc./Orig. Visc.	—	4.0	4.0	4.0	4.0
Flash Point, Cleveland Open Cup, °C, [d]	T48				
Original Binder, Minimum		232	232	232	232
Mass Loss After RTFO Test, %	T240	0.60	0.60	0.60	0.60
Solubility in Trichloroethylene, % [c]	T44				
Original Binder, Minimum		Report	Report	Report	Report
Ductility (25°C, 5 cm/min), cm	T51				
RTFO Test Aged Residue [b], Minimum		60	60	60	75
On RTFO Test Aged Residue, °C: 1 to 10 rad/sec: SSD ≥ 0 and Phase Angle (at 1 rad/sec) < 72°	[f]	—	35	—	—
On Residue from	R28				
PAV [g] at temp., °C		100	100	100	110
Or Residue from Tilt Oven[f] (@113°C), hours		36	36	36	72
[e] SSD ≥ -115(SSV)-50.6, °C	[f]	—	—	—	25
Stiffness,	T313				
Test Temperature, °C		-24	-24	-30	-6
Maximum S-value, MPa		300	300	300	300
Minimum M-value		0.300	0.300	0.300	0.300

Notes:

a. Absolute viscosity (60°C) will be determined at one sec^{-1} using ASTM Designation: D 4957 with Asphalt Institute vacuum capillary viscometers.
b. "RTFO Aged Residue" means the asphaltic residue obtained using the Rolling Thin Film Oven Test (RTFO Test), AASHTO Test Method T240 or ASTM Designation: D 2872.
c. There is no requirement; however results of the test shall be part of the certified copy of test results furnished with the Certificate of Compliance.
d. "Residue from Tilt Oven " means the asphalt obtained using California Test 374, Method B, "Method for Determining Asphalt Durability Using the California Tilt-Oven Durability
e. Test."
f. "SSD" means Shear Susceptibility of Delta; "SSV" means Shear Susceptibility of
g. Viscosity.
California Test 381.
"PAV" means Pressurized Aging Vessel.

92-1.02(C) Sampling

- The Contractor shall provide a sampling device in the asphalt feed line connecting the plant storage tanks to the asphalt weighing system or spray bar. The sampling device shall be accessible between 600 mm and 750 mm above the platform. The Contractor shall provide a receptacle for flushing the sampling device.
- The sampling device shall include a valve:

A. With a diameter between 10 mm and 20 mm.
B. Manufactured in a manner that a one-liter sample may be taken slowly at any time during plant operations.
C. Maintained in good condition.

- The Contractor shall replace failed valves.
- In the presence of the Engineer, the Contractor will take 2 one-liter samples per operating day. The Contractor shall provide round, friction top, one-liter containers for storing samples.

92-1.03 APPLYING ASPHALT

- Unless otherwise specified, the Contractor shall heat and apply asphalt in conformance with the provisions in Section 93, "Liquid Asphalts."
- The Contractor shall apply paving asphalt at a temperature between 120°C and 190°C. The Engineer will determine the exact temperature of paving asphalt.

92-1.04 MEASUREMENT

- If asphalt is paid as a contract work item on a mass basis, the Department will measure asphalt by the tonne under the provisions for determining the mass for payment of liquid asphalt in Section 93, "Liquid Asphalt."
- The Engineer will determine the mass of asphalt from volumetric measurements if the Contractor:

A. Uses partial loads of asphalt.
B. Uses asphalt at locations other than a mixing plant and no suitable scales are available within 35 km.
C. Delivers asphalt meeting either of the following:

1. In calibrated trucks and each tank is accompanied by its measuring stick and calibration card.
2. In trucks equipped with a calibrated thermometer that determines the asphalt temperature at the time of delivery and equipped with a vehicle tank meter meeting Section 9-1.01, "Measurement of Quantities," for weighing, measuring, and metering devices.

- If the Contractor furnishes asphalt concrete from a mixing plant producing material for only one project, the Department will determine the amount of asphalt from volumetric measurements by measuring the amount in the tank at the start and the end of the project provided the tank is calibrated and equipped with its measuring stick and calibration card. The Engineer will determine pay quantities in conformance with the following:

A. Before converting the volume to mass, the Engineer will reduce the volume measured to that which the asphalt would occupy at 15°C.
B. The Engineer will use 981 L/tonne and 1020 g/L for the average weight and volume for both PG and PBA grades of asphalt at 15°C.
C. The Engineer will use the Conversion Table in Section 93, "Liquid Asphalts."

SECTION 93: LIQUID ASPHALTS

Issue Date: November 18, 2005

The ninth paragraph of Section 93-1.04, "Measurement," of the Standard Specifications is amended to read:

- The following Legend and Conversion Table is to be used for converting volumes of liquid asphalt products, Grades 70 to 3000, inclusive, and paving asphalt Grades PG 58-22, PG 64-10, PG 64-16, PG 64-28, and PG 70-10, and Grades PBA 6a, PBA 6a (mod), PBA 6b, and PBA 7.

SECTION 95: EPOXY

Issue Date: June 30, 2006

Section 95, "Epoxy," of the Standard Specifications is amended to read:

95-1 GENERAL

95-1.01 DESCRIPTION

- These specifications are intended to specify epoxy that will meet service requirements for highway construction.
- Epoxy shall be furnished as 2 components, which shall be mixed together at the site of the work.

95-1.02 SAMPLING AND TESTING

- Epoxy shall not be used prior to sampling and testing unless its use is permitted prior to sampling and testing in conformance with the provisions in Section 6-1.07, "Certificates of Compliance."
- Tests will be conducted in conformance with the latest test methods of the American Society for Testing and Materials, and California Test Methods in use by the Transportation Laboratory.
- Epoxy components shall be formulated to maintain the specified properties for a minimum of one year. The Engineer may require additional testing of any epoxy component that has not been used within one year of manufacture.

95-1.03 PACKAGING, LABELING AND STORING

- Each component shall be packaged in containers of size proportional to the amount of that component in the mix so that one container of each component is used in mixing one batch of epoxy. The containers shall be of such design that all of the contents may be readily removed and shall be well sealed to prevent leakage. The containers and labeling shall meet U.S. Department of Transportation Hazardous Material Shipping Regulations, and the containers shall be of a material, or lined with a material, of such character as to resist any action by the components. Each container shall be clearly labeled with the ASTM Designation: C881 Class and Type; designation (Component A or B); manufacturer's name; date of manufacture; batch number (a batch shall consist of a single charge of all components in a mixing chamber); all directions for use (as specified elsewhere) and such warning or precautions concerning the contents as may be required by State or Federal Laws and Regulations. The manufacturer of the finished epoxy components shall furnish a Certificate of Compliance in conformance with the provisions in Section 6-1.07, "Certificates of Compliance," and a copy of the label for each material. The certificate shall include a list, by Title and Section, of the State and Federal packaging and labeling laws and regulations that the manufacturer has complied with.
- Attention is directed to the characteristic of some epoxy components to crystallize or thicken excessively prior to use when stored at temperatures below 2ºC. Any material which shows evidence of crystallization or a permanent increase in viscosity or settling of pigments which cannot be readily redispersed with a paddle shall not be used.

95-1.04 DIRECTIONS FOR USE

- At the time of mixing, components A and B shall be at a temperature between 15°C and 30°C, unless otherwise specified. Any heating of the adhesive components shall be done by application of indirect heat. Immediately prior to mixing, each component shall be thoroughly mixed with a paddle. Separate paddles shall

be used to stir each component. Immediately prior to use, the 2 components shall be thoroughly mixed together in the specified ratios. No solvent shall be added to any epoxy.

• After mixing, epoxies shall be placed in the work and any overlaying or inserted material which is to be bonded to the work by the epoxy shall also be placed before thickening of the epoxy has begun. Surfaces upon which epoxy is to be placed shall be free of rust, paint, grease, asphalt, and loose and deleterious material. When epoxy is used as a binder to make epoxy concrete or mortar, the 2 components of epoxy shall be thoroughly mixed together before the aggregate is added and, unless otherwise specified, the mix proportions shall consist of one part of binder to approximately 4 parts of aggregate, by volume. Aggregate for use in epoxy concrete and mortar shall be clean and shall have a moisture content of not more than 0.50-percent when tested by California Test 226. Surfaces against which epoxy concrete and mortar are to be placed shall be primed with a coat of the epoxy used just prior to placing the concrete or mortar.

95-2 TYPES OF EPOXIES

95-2.01 BINDER (ADHESIVE), EPOXY RESING BASE

Classification:

• This specification covers a low viscosity epoxy formulated primarily for use in making high-strength epoxy concrete and epoxy mortar and in pressure grouting of cracks in concrete. For load bearing applications, use ASTM Designation: C 881, Type IV, Grade 1, Class B or C. Class B or C shall be used depending on the substrate and ambient temperatures. Use Grade B for atmospheric and surface temperatures as low as 4°C. Use Class C when temperatures are 15°C or higher. For non-load bearing applications use ASTM Designation: C881, Type I, Grade 1, Class B or C. Apply no thicker than recommended by the manufacturer. Thick sections of this epoxy are not suitable for use in freeze thaw environments. In a freeze-thaw environment, increase the aggregate loading to improve the properties of the epoxy concrete.

Directions for Use:

• Mix in conformance with the manufacturer's written recommendations. No more material shall be mixed than can be used within the pot-life from the time mixing operations are started.

95-2.02 (BLANK)

95-2.03 EPOXY RESIN ADHESIVE FOR BONDING NEW CONCRET TO OLD CONCRETE

Classification:

• This specification covers a low viscosity paste epoxy formulated primarily for use in bonding new portland cement concrete to hardened portland cement concrete. The epoxy shall meet the specification requirements of ASTM Designation: C 881, Type V, Grade 2. This epoxy is available in 2 Classes: Class C for general use at temperature greater than 15°C and Class B for use when cure temperatures are below 15°C and above 4°C, or when a faster cure is required.

Directions for Use:

• The mixing ratio and use shall be in conformance with the manufacturer's written recommendations. When measuring as individual Components A and B, stir and tap the measuring containers to remove possible air voids. The ingredients in Components A and B shall be thoroughly dispersed such that each component forms a uniform paste. Do not mix more material than can be spread within the pot life from the time mixing operations are started. The spreading rate shall be sufficient to thoroughly coat the surface. Spread the mixed adhesive by brush or roller over blast-cleaned concrete at a rate recommended by the manufacturer. The new concrete shall be placed against the adhesive coating on the old concrete before the adhesive has set. If the adhesive has set and is not tacky prior to placing the new concrete, a new coating of adhesive shall be applied.

95-2.04 RAPID SET EPOXY ADHESIVE FOR PAVEMENT MARKERS

Classification:

• This specification covers a high viscosity paste, rapid set epoxy formulated primarily for use in bonding pavement markers to portland cement concrete and asphalt concrete. The adhesive shall meet ASTM Designation: C 881, Type IV, Grade 3, Class B and C except that the gel time may be shorter than 30 minutes. The adhesive shall conform to these requirements and the following.

Characteristics of Combined Components:

• All tests shall be performed in conformance with the requirements in California Test 434.

Property	Requirement
Gel time, minutes, maximum, at 25°C	30
Bond Strength to Concrete, Time, minutes (maximum) to reach not less than 1.4 MPa	
at 25ºC ±1ºC	35
at 10ºC ±1ºC	45
Slant Shear Strength	
2 days at 25ºC ±1ºC, MPa	7
14 days at 25ºC ±1ºC, plus water soak, MPa	10.5
Tensile Adhesion and Cohesion	
Ceramic marker bottom, MPa	4.8 min.
Ceramic marker bottom, including post cure, MPa	4.8 min.
Retroreflective pavement marker bottom, MPa	3.4 min.
Color of mixed epoxy	gray
Glass transition temperature, Tg, samples conditioned at 25°C for 24 hours, ASTM Designation: D 4065	30ºC min.

Directions for Use:

• Components A and B shall be mixed in conformance with the manufacturer's written recommendations. When an automatic proportioning and mixing machine is used, the temperature of the components shall be maintained by indirect heating or cooling, so that the adhesive will meter, mix and extrude properly. The maximum temperature shall be such that after proper mixing no excess adhesive shall flow from under the marker other than that specified in Section 85-1.06, "Placement."

95-2.05 STANDARD SET EPOXY ADHESIVE FOR PAVEMENT MARKERS

Classification:

• This specification covers a high viscosity paste standard set epoxy formulated primarily for use in bonding pavement markers to portland cement concrete and asphalt concrete. The epoxy shall meet ASTM Designation: C 881, Type IV, Viscosity Grade 3, Classes B or C, except that the gel time may be shorter than 30 minutes.

Characteristics of Combined Components:

• All tests shall be performed in conformance with the requirements in California Test 434.

Property	Requirement
Gel time, minutes, maximum, at 25ºC	30
Bond Strength to Concrete, Time (maximum) to reach not less than 1.4 MPa	
at 25ºC ±1ºC	3.5 hours
at 13ºC ±1ºC	24 hours
Slant Shear Strength	
2 days at 25ºC ±1ºC, MPa	7 min.
14 days at 25ºC ±1ºC, plus water soak, MPa	10.5 min.
Tensile Adhesion and Cohesion	
Ceramic marker bottom, MPa	4.8 min.
Ceramic marker bottom, including post cure, MPa	4.8 min.
Reflective pavement marker bottom, MPa	3.4 min.
Color of Mixed Components	gray
Glass transition temperature, Tg, samples conditioned at 25ºC for 24 hours, ASTM Designation: D 4065	30ºC min.

Directions for Use:

- Components A and B shall be mixed in conformance with the manufacturer's written recommendations. When an automatic proportioning and mixing machine is used, the temperature of the components shall be maintained by indirect heating or cooling, so that the adhesive will meter, mix and extrude properly. The maximum temperature shall be such that after proper mixing no excess adhesive shall flow from under the marker other than that specified in Section 85-1.06, "Placement."

95-2.06 (BLANK)

95-2.07 (BLANK)

95-2.08 (BLANK)

95-2.09 EPOXY SEALANT FOR INDUCTIVE LOOPS

Classification:

- This specification covers a high viscosity liquid epoxy formulated primarily for use in sealing inductive wire loops and leads imbedded in asphalt concrete and portland cement concrete for traffic signal controls and vehicle counters. This epoxy is to be used for repair work on existing spalls, cracks and other deformations in and around saw cuts housing inductor loops and leads. The rapid cure allows minimum traffic delay. This sealant is suitable for use in freeze-thaw areas. The epoxy shall meet ASTM Designation: C 881, Type I, Grade 2 and the following requirements.

Characteristics of Combined Components:

- All tests shall be performed in conformance with the requirements in California Test 434.

Property	Requirement
Gel time, minutes, maximum	30
On 3-mm cast sheet, cured 18 hours at 25ºC, + 5 hours at 70ºC	
Tensile Strength, MPa	2.7 min.
Elongation, percent	90 min.
Shore D Hardness	45 min.

Directions for Use:

- Saw cuts shall be cleaned with compressed air to remove all excess moisture and debris. For repairing damaged saw cuts, all loose spalled material shall be cleaned away from the saw cut, chipping back to sound asphalt concrete or portland cement concrete and all loose material cleaned from loop wires.
- The mixing ratio shall be in conformance with the manufacturer's recommendations. No more material shall be mixed than can be used within the gel time from the time mixing operations are started.
- When automatic mixing equipment is used for mixing the sealant, the provisions in the twelfth paragraph in Section 85-1.06, "Placement," shall apply.

95-2.10 (BLANK)

95-2.11 EPOXY RESIN ADHESIVE FOR INJECTION GROUTING OF PORTLAND CEMENT CONCRETE PAVEMENTS

Directions for Use:

- Both components and the mixed material shall contain no solvents. The mixing ratio of the components in terms of volume and mass shall be clearly stated. The material shall be suitable for use in the mixing equipment used by the applicator. Epoxy adhesive samples shall be furnished to the Engineer for testing at least 12 days before the expected time of use.

Characteristics of Adhesive:

Test[a]	California Test	Requirement
Brookfield Viscosity, No. 3 Spindle at 20 rpm, Pa·s at 25ºC	434, Part 4	0.9 max.
Gel time, minutes	434, Part 1	2 to 15
Slant Shear Strength on Dry Concrete, MPa, after 4 days of cure in air at 25ºC ±1ºC	434, Part 5[b]	41.4 min.
Slant Shear Strength on Wet Concrete, MPa, after 4 days of cure in air at 25ºC ±1ºC	434, Part 5[b]	21.1 min.
Tensile Strength, Mpa	434, Part 7, except test after 4 days of cure at 25ºC ±1ºC	31.0 min.
Elongation, %	434, Part 7, except test after 4 days of cure at 25ºC ±1ºC	10 max.

a The mixing ratio used will be that recommended by the manufacturer.

b For slant shear strength on concrete, delete Sections B-1 and B-5 of California Test 434, Part 5. For dry concrete, use Step "2" below only. For wet concrete, use both Steps "1" & "2":

1 Soak blocks in water for 24 hours at 25ºC ±1ºC. Remove and wipe off excess water.

2 Mix epoxy as described in California Test 434, Part 1, and apply a coat approximately 250 µm-inch thick to each diagonal surface. Place four 3-mm square pieces of shim stock 305 µm thick on one block to control final film thickness. Before pressing the coated surfaces together, leave the blocks so that the coated surfaces are horizontal until the epoxy reacts slightly to prevent excessive flow.

END OF AMENDMENTS

SECTION 1. SPECIFICATIONS AND PLANS

1-1.01 GENERAL

The work embraced herein constitutes a "Minor Contract". The work shall be done in accordance with the July, 1999 Standard Specifications and the July, 2004 Standard Plans of the Department of Transportation and in accordance with the following special provisions and proposal, the proposed "Form of Contract" and the attached Project Plans and applicable "Standard Plan" sheets.

Project plans shall consist of Drawing Number 0F0401-1 to 0F0401-7

All references to the Director in the July, 1999 Standard Specifications shall be construed to mean the District Director.

Any paragraph of the Standard Specifications referencing or pertaining to Chapter 1, (commencing with Section 10100) of Part 2 of Division 2 of the Public Contract Code shall not apply to this contract.

In the event of conflict between the Standard Specifications and these special provisions, the special provisions shall take precedence over and be used in lieu of such conflicting portions.

1-1.02 STANDARD PLANS LIST -

The Standard Plan sheets applicable to this contract include, but are not limited to those indicated below. Applicable Revised Standard Plan (RSP) and New Standard Plan (NSP) indicated below are included in the project plans as individual Standard Plan sheets.

A10A	**Abbreviations**
A10B	**Symbol**
A62F	**Excavation and Backfill Metal and Plastic Culverts**
D73	**Drainage Inlets**
D77A	**Grate Details**
D77B	**Bicycle Proof Grate Details**
D88	**Construction Loads On Culverts**

SECTION 2. PROPOSAL REQUIREMENTS AND CONDITIONS

2-1.01 GENERAL

The bidder's attention is directed to the provisions in Section 2, "Proposal Requirements and Conditions," of the Standard Specifications and these special provisions for the requirements and conditions which the bidder must observe in the preparation of the proposal form and the submission of the bid.

In addition to the subcontractors required to be listed in accordance with Section 2-1.054, "Required Listing of Proposed Subcontractors," of the Standard Specifications, each proposal shall have listed therein the name and address of each DVBE subcontractor to be used for credit in meeting the goal, and to whom the bidder proposes to directly subcontract portions of the work. The list of subcontractors shall also set forth the portion of work that will be done by each subcontractor listed. A sheet for listing the subcontractors is included in the Proposal.

In accordance with Public Contract Code Section 7106, a Noncollusion Affidavit is included in the Proposal. Signing the Proposal shall also constitute signature of the Noncollusion Affidavit.

2-1.02 SUBMISSION OF BIDS

Bids for this project are to be submitted in a lump sum amount for the entire work.

2-1.03 DISABLED VETERAN BUSINESS ENTERPRISE (DVBE)

Section 10115 of the Public Contract Code requires the Department to implement provisions to establish a goal for Disabled Veterans Business Enterprise (DVBE) in contracts.

It is the policy of the Department that Disabled Veteran Business Enterprise (DVBE) shall be provided the opportunity for full participation in the performance of contracts financed solely with state funds. The Contractor shall ensure that DVBEs have such opportunity to participate in the performance of this contract and shall take all necessary and reasonable steps for this assurance. The Contractor shall not discriminate on the basis of race, color, national origin, or sex in the award and performance of subcontracts.

Bidder's attention is directed to the following:

(a) "Disabled Veteran Business Enterprise" (DVBE) means a business concern certified as a DVBE by the Office of Small Business Certification and Resources, Department of General Services.

(b) A DVBE may participate as a prime contractor, subcontractor, joint venture partner with a prime or subcontractor, or vendor of material or supplies;

(c) Credit for DVBE prime contractors will be 100 percent.

(d) A DVBE joint venture partner must be responsible for specific contract items of work, or portions thereof. Responsibility means actually performing, managing and supervising the work with its own forces. The DVBE joint venture partner must share in the ownership, control, management,. responsibilities, risks and profits of the joint venture. The DVBE joint venture must submit the joint venture agreement with the Caltrans Bidder DVBE Information form required in Section 3-1.01A, "DVBE Information," elsewhere in these special provisions;

(e) A DVBE contractor, subcontractor or supplier means any person or entity certified in conformance with the Public Contract Code which provides goods and services that contribute to the fulfillment of the contract requirements by performing a commercially useful function, i.e., is responsible for the execution of a distinct element of the work and carries out its responsibility by actually performing, managing and supervising the work;

(f) Credit for DVBE subcontractor, supplier or broker will be 60 percent of the subcontracted item provided such DVBE is performing a commercially useful function,

(g) DVBEs and DVBE joint venture partners must be certified DVBEs as determined by the Department of General Services, Office of Small Business Certification and Resources **707 3rd Street, First Floor, Room 400, West Sacramento, CA 95605**, on the date bids for the project are opened before credit may be allowed toward the DVBE goal. **It is the Contractor's responsibility to verify that DVBEs are certified,**

(h) Failure to carry out the requirements of the above paragraphs shall constitute a breach of contract and may result in termination of this contract or other remedy the Department may deem appropriate

2-1.04 DVBE GOAL FOR THIS PROJECT

The Department has established the following goal for Disabled Veteran Business Enterprise (DVBE) participation for this project:

Disabled Veteran Business Enterprise (DVBE),.3 percent.

It is the bidder's responsibility to make a sufficient portion of the work available to subcontractors and suppliers and to select those portions of the work or material needs consistent with the available DVBE subcontractors and suppliers, so as to assure meeting the goal for DVBE participation.

DEPARTMENT OF GENERAL SERVICES -
OFFICE OF SMALL BUSINESS CERTIFICATION AND RESOURCES

The Office of Small Business Certification and Resources, Department of General Services, may be contacted at (916) 375-4940 or visit its internet web site at http://www.pd.dgs.ca.gov/smbus for program information, including a list of trade and focus publications to assist bidders in meeting these contract requirements and the certification status of DVBEs.

CALTRANS BUSINESS ENTERPRISE PROGRAM

The Caltrans Department's Business Enterprise Program may be contacted at (916) 324-1700 or its internet web site at http://www.dot.ca.gov/hq/bep/.

CALIFORNIA DEPARTMENT OF TRANSPORTATION
PUBLICATIONS DISTRIBUTION UNIT

Call (916) 445-3520 to order a hard copy of the Directory of Certified Firms including DVBE firms. Have your credit card available to provide payment information.

The Internet address is http://caltrans-opac.ca.gov/publicat.htm. You can obtain an order form to purchase the Directory of Certified Firms by downloading the form from the Internet, completing it, and mailing or faxing it to: Department of Transportation Publications **Distribution** Unit, 1900 Royal Oaks Drive, Sacramento, CA 95815-3800. You can fax an order form to (916) 324-8997.

2-1.05 CALIFORNIA COMPANY PREFERENCE

Attention is directed to "Award and Execution of Contract" of these special provisions.

In accordance with the requirements of Section 6107 of the Public Contract Code, a "California company" will be granted a reciprocal preference for bid comparison purposes as against a nonresident contractor from

any state that gives or requires a preference to be given contractors from that state on its public entity construction contracts.

A "California company" means a sole proprietorship, partnership, joint venture, corporation, or other business entity that was a licensed California contractor on the date when bids for the public contract were opened and meets one of the following:

(A) Has its principal place of business in California.
(B) Has its principal place of business in a state in which there is no local contractor preference on construction contracts.

(C) Has its principal place of business in a state in which there is a local contractor construction preference and the contractor has paid not less than $5000 in sales or use taxes to California for construction related activity for each of the five years immediately preceding the submission of the bid.

To carry out the "California company" reciprocal preference requirements of Section 6107 of the Public Contract Code, all bidders shall fill out and sign the California Company Preference form in the Proposal. The bidder's signature on the California Company Preference form certifies, under penalty of perjury, that the bidder is or is not a "California company" and if not, the amount of the preference applied by the state of the nonresident company.

A nonresident Contractor shall disclose any and all bid preferences provided to the nonresident Contractor by the state or country in which the nonresident Contractor has its principal place of business.

Proposals without the California Company Preference form filled out and signed may be rejected.

2-1.06 PROPOSAL GUARANTY

Section 2-1.07 "Proposal Guaranty" of the Standard Specifications is amended to read:

All bids shall be presented under sealed cover and accompanied by one of the following forms of bidder's security:

Cash, a cashier's check, a certified check, or a bidder's bond executed by an admitted surety insurer, made payable to the Director of Transportation.

The security shall be in an amount equal to at least 10 percent of the amount bid. A bid will not be considered unless one of the forms of bidder's security is enclosed with it. The bidder's bond shall conform to the bond form included in the bid proposal.

2-1.07 SMALL BUSINESS PREFERENCE

Attention is directed to Section 3 “Award Of Contract” of these special provisions.

Attention is also directed to the Small Business Procurement and Contract Act, Government Code Section 14835, et seq and Title 2, California Code of Regulations, Section 1896, et seq.

Bidders who wish to be classified as a Small Business under the provisions of those laws and regulations, shall be certified as Small Business by the Department of General Services, Office of Small Business Certification and Resources, **707 3rd Street, First Floor, Room 400, West Sacramento, CA 95605.**

To request Small Business Preference, bidders shall fill out and sign the Request for Small Business Preference form in the Proposal and write in their Small Business Certification number. The bidder's signature on the Request for Small Business Preference certifies, under penalty of perjury, that the bidder is certified as Small Business or has an application for Small Business certification on file with the Office of Small Business Certification and Resources (OSBCR) by 5:00 p.m. of the bid opening date and are subsequently granted Small Business certification.

SECTION 3. SUBMISSION OF DVBE INFORMATION AND AWARD AND EXECUTION OF CONTRACT

3-1.01 GENERAL

The bidder's attention is directed to the provisions in Section 3, "DVBE Information and Award and Execution of Contract," of the Standard Specifications and these special provisions for the requirements and conditions concerning submittal of DVBE information and award and execution of contract.

The required DVBE information shall be submitted on the "CALTRANS BIDDER - DVBE INFORMATION" form included in the Proposal..

It is the bidder's responsibility to meet the goal for DVBE participation or to provide information to establish that, prior to bidding, the bidder made a good faith effort to do so.

3-1.01A DVBE INFORMATION

The bidder's DVBE informationsubmitted with the bid shall establish that the DVBE goal will be met or that a good faith effort to meet the goal has been made Bidders are cautioned that even though their submittal indicates they will meet the stated DVBE goal, their submittal should also include their good faith efforts information along with their DVBE goal information to protect their eligibility for award of the contract in the event the Department, in its review, finds that the goal has not been met. Failure to submit the required DVBE information by the time specified will be grounds for finding the bid or proposal nonresponsive.

The bidder's DVBE information shall include the names of DVBE firms and DVBE joint venture partners to be used, that will participate, with a complete description of work or supplies to be provided by each, the dollar value of each DVBE transaction, and a written confirmation on company letterhead from the DVBE that it is participating in the contract. A copy of the DVBE's quote will serve as written confirmation that the DVBE is participating in the contract. When 100 percent of a contract item of work is not to be performed or furnished by a DVBE, a description of the exact portion of that work to be performed or furnished by that DVBE shall be included in the DVBE information, including the planned location of that work. DVBE subcontractors to whom the bidder proposes to directly subcontract portions of the work are to be named in the bid. - See Section 2-1.054, "Required Listing of Proposed Subcontractors," of the Standard Specifications and Section 2-1.01, "General," of these special provisions, regarding listing of proposed subcontractors.

A bidder shall be deemed to have made good faith efforts upon submittal, within time limits specified by the Department, of documentary evidence that all of the following actions were taken:

(1) Contact the Caltrans Civil Rights Program to identify Disabled Veteran Business Enterprises by calling (916) 324-1700 or by faxing to **Attn: Contract Evaluation Unit at (916) 324-8760**. Internet contact is acceptable. Bidders must print out the applicable pages and submit with the bid package.

(2) Other State and Federal agencies and local DVBE organizations that were contacted to identify DVBEs. Contact was made with the Office of Small Business Certification and Resources (OSBCR), Department of General Services or their web site at www.osmb.dgs.ca.gov/ to identify Disabled Veteran Business Enterprises. Contact also needs to be made a Federal agency and with a local DVBE organization. These groups are listed in the Resource Package provided by Office of Small Business Certification and Resources (OSBCR) through their office or internet site listed below.

Internet contact is acceptable. Bidders shall print out the applicable pages and submit with the bid package.

(3) Unless otherwise specified in the solicitation document, bidders must publish advertisements in trade and focus publications at least 14 calendar days prior to the due date of the response to the solicitation (CCR Title 2 Section 1896.63(d)(2). In accordance with Public Contract Code Section 10115.2(b)(3), bidders must advertise in trade and focus publications unless the DVBE goal is satisfied. The Office of Small Business Certification and Resources (OSBCR) publishes a list of trade and focus publications to assist bidders in meeting these contract requirements. To obtain this list, please contact the OSBCR and request the "Resource Packet". The OSBCR may be contacted at Department of General Services, Office of Small Business Certification and Resources, **707 3rd Street, First Floor, Room 400, West Sacramento, CA 95605**, (916)375-4940 or on the internet at http://www.pd.dgs.ca.gov/smbus.

(4) Invitations to bid were submitted to potential Disabled Veteran Business Enterprise contractors.

(5) Available Disabled Veteran Business Enterprises were considered.

3-1.02 AWARD OF CONTRACT

The award of contract, if it be awarded, will be to the lowest responsible bidder whose proposal complies with all the requirements prescribed and who has met the goal for DVBE participation or has demonstrated, to the satisfaction of the Department, good faith effort to do so. Meeting the goal for DVBE participation or demonstrating, to the satisfaction of the Department, good faith efforts to do so is a condition for being eligible for award of contract.

A "Payee Data Record" form will be included in the contract documents to be executed by the successful bidder. The purpose of the form is to facilitate the collection of taxpayer identification data. The form shall be completed and returned to the Department by the successful bidder with the executed contract and contract bonds. For the purposes of the form, vendor shall be deemed to mean the successful bidder. The form is not to be completed for subcontractors or suppliers. Failure to complete and return the "Payee Data Record" form to the Department as provided herein will result in the retention of 20 percent of payments due the contractor and penalties of up to $20,000. This retention of payments for failure to complete the "Payee Data Record" form is in addition to any other retention of payments due the Contractor.

Attention is also directed to "Small Business Preference" of these special provisions. Any bidder who is certified as a Small Business by the Department of General Services, Office of Small Business Certification and Resources will be allowed a preference in the award of this contract, if it be awarded, under the following conditions:

(1) The apparent low bidder is not certified as a Small Business, or has not filled out and signed the Request for Small Business Preference included with the bid documents and written their Office of Small Business Certification and Resources (OSBCR) small business certification number on the form; and
(2) The bidder filled out and signed the Request for Small Business Preference form included with the bid documents wrote their Office of Small Business Certification and Resources (OSBCR) small business certification number on the form.

The small business preference will be a reduction in the bid submitted by the small business contractor, for bid comparison purposes, by an amount equal to 5 percent of the amount bid by the apparent low bidder, the amount not to exceed $50,000. If this reduction results in the small business contractor becoming the low bidder, then the contract will be awarded to the small business contractor on the basis of the actual bid of the small business contractor notwithstanding the reduced bid price used for bid comparison purposes.

Attention is also directed to "California Company Preference" of these special provisions.

The amount of the California company reciprocal preference shall be equal to the amount of the preference applied by the state of the nonresident contractor with the lowest responsive bid, except where the "California

company" is eligible for a California Small Business Preference, in which case the preference applied shall be the greater of the two, but not both.

If the bidder submitting the lowest responsive bid is not a "California company" and with the benefit of the reciprocal preference, a "California company's" responsive bid is equal to or less than the original lowest responsive bid, the "California company" will be awarded the contract at its submitted bid price except as provided below.

Small business bidders shall have precedence over non-small business bidders in that the application of the "California company" preference for which non-small business bidders may be eligible shall not result in the denial of the award to a small business bidder.

3-1.03 FAILURE TO EXECUTE CONTRACT

Section 3-1.04, "Failure to Execute Contract," of the Standard Specifications shall not apply to contracts, where the bid amount is $5,000 or less.

3-1.04 INSURANCE PROVISIONS

The Contractor shall furnish to the State a certificate of insurance stating that there is liability insurance presently in effect for the Contractor with a combined single limit (CSL) of not less than $1,000,000 per occurrence.

The certificate of insurance will provide:

1. That the insurer will not cancel the insured's coverage without 30 days prior written notice to the State.
2. That the State of California, its officers, agents, employees, and servants are included as additional insureds, but only insofar as the operations under this contract are concerned.
3. That the State will not be responsible for any premiums or assessments on the policy**.**

Contractor agrees that the automobile, bodily injury liability and property damage insurance herein provided for shall be in effect at all times during the term of this contract. In the event said insurance coverage expires at any time or times during the term of this contract, Contractor agrees to provide at least thirty (30) days prior to said expiration date, a new certificate of insurance evidencing insurance coverage as provided for herein for not less than the remainder of the term of the contract, or for a period of not less than one (1) year. New certificates of insurance are subject to the approval of the State and Contractor agrees that no work or services shall be performed prior to the giving of such approval. In the event Contractor fails to keep in effect at all times insurance coverage as herein provided, State may, in addition to any other remedies it may have, terminate this contract upon the occurrence of such event.

3-1.05 LICENSED CONTRACTOR STANDARDS FOR QUALITY OF WORK

Licensed contractors must observe professional standards for quality of work or the California Contractors State License Board will invoke disciplinary action.

Notice is hereby given that certain actions by a Contractor, including, but not limited to the following, constitute grounds for disciplinary action once the State has notified the license board of all violations:

a. A willful departure from plans and specifications or disregard of trade standards for good and workmanlike construction in any material respect that might prejudice the Department of Transportation, owner of the property upon which you perform work (Bus. & Prof. Code, 7109).

SECTION 4. BEGINNING OF WORK, TIME OF COMPLETION AND LIQUIDATED DAMAGES

Attention is directed to the provisions in Section 8-1.03, "Beginning of Work," in Section 8-1.06, "Time of Completion," and in Section 8-1.07, "Liquidated Damages," of the Standard Specifications and these special provisions.

The Contractor shall begin work by the date specified in the Contract Administrator's letter informing him/her that the contract has been approved.

The work shall be diligently prosecuted to completion before the expiration of **20 WORKING DAYS** including the specified starting date.

The Contractor shall notify Contract Administrator

Mr. Ray Nozzari, Senior Transportation Engineer (Construction)
4030 Occidental Road, Building A
Santa Rosa, CA 995401
Telephone: (707) 566-3945
(707) 576-6741

at least 72 hours in advance of starting work.

The Contractor shall pay to the State of California the sum of $300 per day, for each and every calendar day's delay in finishing the work in excess of the number of working days prescribed above. In addition to any penalties prescribed herein, should the Contractor fail to commence work within five (5) working days after notification of the starting date, or suspend work for a period of five (5) continuous working days after work has begun, the State may provide five (5) days written notice, posted at the job site or mailed to the Contractor, to timely prosecute and complete the work or the contract may be terminated and liquidated damages of $500.00 assessed for administrative costs for re-bidding the work.

In addition, the Contractor shall be liable to the State for the difference between the Contractor's bid price and the actual cost of performing the work by the second low bidder or by another contractor.

SECTION 5. GENERAL

5-1.01 PLANS AND WORKING DRAWINGS

When the specifications require working drawings to be submitted to the Division of Maintenance, the drawings shall be submitted to:
Department of Transportation Dist.-04, Office of Maintenance and Toll Bridge Engineering,
111 grand Avenue, P.O. Box 23660, Oakland ,CA 94623-0660
Telephone 510-286-5198

5-1.011 EXAMINATION OF PLANS, SPECIFICATIONS, CONTRACT, AND SITE OF WORK

Attention is directed to "Differing Site Conditions" of these special provisions regarding physical conditions at the site which may differ from those indicated in "Materials Information," log of test borings or other geotechnical information obtained by the Department's investigation of site conditions.

5-1.012 DIFFERING SITE CONDITIONS

Attention is directed to Section 5-1.116, "Differing Site Conditions," of the Standard Specifications.

During the progress of the work, if subsurface or latent conditions are encountered at the site differing materially from those indicated in the "Materials Information," log of test borings, other geotechnical data obtained by the Department's investigation of subsurface conditions, or an examination of the conditions above ground at the site, the party discovering those conditions shall promptly notify the other party in writing of the specific differing conditions before they are disturbed and before the affected work is performed.

The Contractor will be allowed 3 days from the notification of the Engineer's determination of whether or not an adjustment of the contract is warranted, in which to file a notice of potential claim in conformance with the provisions of Section 9-1.04, "Notice of Potential Claim," of the Standard Specifications and as specified herein; otherwise the decision of the Engineer shall be deemed to have been accepted by the Contractor as correct. The notice of potential claim shall set forth in what respects the Contractor's position differs from the Engineer's determination and provide any additional information obtained by the Contractor, including but not limited to additional geotechnical data. The notice of potential claim shall be accompanied by the Contractor's certification that the following were made in preparation of the bid: a review of the contract, a review of the "Materials Information," a review of the log of test borings and other records of geotechnical data to the extent they were made available to bidders prior to the opening of bids, and an examination of the conditions above ground at the site. Supplementary information, obtained by the Contractor subsequent to the filing of the notice of potential claim, shall be submitted to the Engineer in an expeditious manner.

5-1.015 LABORATORY

When a reference is made in the specifications to the "Laboratory," the reference shall mean Division of Engineering Services - Materials Engineering and Testing Services and Division of Engineering Services - Geotechnical Services of the Department of Transportation, or established laboratories of the various Districts of the Department, or other laboratories authorized by the Department to test materials and work involved in the contract. When a reference is made in the specifications to the "Transportation Laboratory," the reference shall mean Division of Engineering Services - Materials Engineering and Testing Services and Division of Engineering Services - Geotechnical Services, located at 5900 Folsom Boulevard, Sacramento, CA 95819, Telephone (916) 227-7000.

5-1.017 CONTRACT BONDS

Attention is directed to Section 3-1.02, "Contract Bonds," of the Standard Specifications and these special provisions.

The payment bond shall be in a sum not less than one hundred percent of the total amount payable by the terms of the contract.

5-1.019 COST REDUCTION INCENTIVE

Attention is directed to Section 5-1.14, "Cost Reduction Incentive," of the Standard Specifications.

Prior to preparing a written cost reduction proposal, the Contractor shall request a meeting with the Engineer to discuss the proposal in concept. Items of discussion will also include permit issues, impact on other projects, impact on the project schedule, peer reviews, overall merit of the proposal, and review times required by the Department and other agencies.

5-1.02 LABOR NONDISCRIMINATION

Attention is directed to the following Notice that is required by Chapter 5 of Division 4 of Title 2, California Code of Regulations.

NOTICE OF REQUIREMENT FOR NONDISCRIMINATION PROGRAM (GOV. CODE, SECTION 12990)

Your attention is called to the "Nondiscrimination Clause", set forth in Section 7-1.01A(4), "Labor Nondiscrimination," of the Standard Specifications, which is applicable to all nonexempt State contracts and subcontracts, and to the "Standard California Nondiscrimination Construction Contract Specifications" set forth therein. The specifications are applicable to all nonexempt State construction contracts and subcontracts of $5000 or more.

Statement of Compliance.--The Contractor's signature affixed hereon and dated shall constitute a certification under the penalty of perjury under the laws of the State of California that the Contractor has, unless exempted, complied with the nondiscrimination program requirements of Government Code Section 12990 and title 2, California Code of regulations, Section 8103.

5-1.03 INTEREST ON PAYMENTS

Interest shall be payable on progress payments, payments after acceptance, final payments, extra work payments, and claim payments as follows:

A. Unpaid progress payments, payment after acceptance, and final payments shall begin to accrue interest 30 days after the Engineer prepares the payment estimate.

B. Unpaid extra work bills shall begin to accrue interest 30 days after preparation of the first pay estimate following receipt of a properly submitted and undisputed extra work bill. To be properly submitted, the bill must be submitted within 7 days of the performance of the extra work and in conformance with the provisions in Section 9-1.03C, "Records," and Section 9-1.06, "Partial Payments," of the Standard Specifications. An undisputed extra work bill not submitted within 7 days of performance of the extra work will begin to accrue interest 30 days after the preparation of the second pay estimate following submittal of the bill.

C. The rate of interest payable for unpaid progress payments, payments after acceptance, final payments, and extra work payments shall be 10 percent per annum.

D. The rate of interest payable on a claim, protest or dispute ultimately allowed under this contract shall be 6 percent per annum. Interest shall begin to accrue 61 days after the Contractor submits to the Engineer information in sufficient detail to enable the Engineer to ascertain the basis and amount of said claim, protest or dispute.

The rate of interest payable on any award in arbitration shall be 6 percent per annum if allowed under the provisions of Civil Code Section 3289.

5-1.031 FINAL PAYMENT AND CLAIMS

Payment will be made for and include full compensation for furnishing all labor, tools, equipment, materials, travel time and incidentals necessary to complete the work as specified in these special provisions and as directed by the Resident Engineer.

Payment will be made to the Contractor, in arrears, upon receipt of fully itemized invoices, submitted in triplicate, and only for the cost of the actual service rendered.

Invoices shall reference the Department of Transportation and this contract number, and shall be submitted to the Resident Engineer's Office.

Section 9-1.07B, "Final Payment and Claims," of the Standard Specifications is amended to read:

9-1.07B Final Payment and Claims

- After acceptance by the Director, the Engineer will make a proposed final estimate in writing of the total amount payable to the Contractor, including an itemization of the total amount, segregated by contract item quantities, extra work and other bases for payment, and shall also show each deduction made or to be made for prior payments and amounts to be kept or retained under the provisions of the contract. Prior estimates and payments shall be subject to correction in the proposed final estimate. The Contractor shall submit written approval of the proposed final estimate or a written statement of claims arising under or by virtue of the contract so that the Engineer receives the written approval or statement of claims no later than close of business of the thirtieth day after receiving the proposed final estimate. If the thirtieth day falls on a Saturday, Sunday or

legal holiday, then receipt of the written approval or statement of claims by the Engineer shall not be later than close of business of the next business day. The Contractor's receipt of the proposed final estimate shall be evidenced by postal receipt. The Engineer's receipt of the Contractor's written approval or statement of claims shall be evidenced by postal receipt or the Engineer's written receipt if delivered by hand.

- On the Contractor's approval, or if the Contractor files no claim within the specified period of 30 days, the Engineer will issue a final estimate in writing in conformance with the proposed final estimate submitted to the Contractor, and within 30 days thereafter the State will pay the entire sum so found to be due. That final estimate and payment thereon shall be conclusive and binding against both parties to the contract on all questions relating to the amount of work done and the compensation payable therefor, except as otherwise provided in Sections 9-1.03C, "Records," and 9-1.09, "Clerical Errors."
- If the Contractor within the specified period of 30 days files claims, the Engineer will issue a semifinal estimate in conformance with the proposed final estimate submitted to the Contractor and within 30 days thereafter the State will pay the sum found to be due. The semifinal estimate and corresponding payment shall be conclusive and binding against both parties to the contract on each question relating to the amount of work done and the compensation payable therefor, except insofar as affected by the claims filed within the time and in the manner required hereunder and except as otherwise provided in Sections 9-1.03C, "Records," and 9-1.09, "Clerical Errors."
- Except for claims for overhead costs and administrative disputes that occur after issuance of the proposed final estimate, the Contractor shall only provide the following two items of information for each claim:

A. The exclusive identification number that corresponds to the supporting full and final documentation of potential claim.
B. The final amount of requested additional compensation.

- If the final amount of requested additional compensation is different than the amount of requested compensation included in the full and final documentation of potential claim, the Contractor shall provide in the written statement of claims the reasons for the changed amount, the specific provisions of the contract which support the changed amount, and a statement of the reasons the provisions support and provide a basis for the changed amount. If the Contractor's claim fails to provide an exclusive identification number or if there is a disparity in the provided exclusive identification number, the Engineer will notify the Contractor of the omission or disparity. The Contractor shall have 15 days after receiving notification from the Engineer to correct the omission or disparity. If after the 15 days has elapsed, there is still an omission or disparity of the exclusive identification number assigned to the claim, the Engineer will assign the number. No claim will be considered that has any of the following deficiencies:

A. The claim does not have the same nature, circumstances, and basis as the corresponding full and final documentation of potential claim.
B. The claim does not have a corresponding full and final documentation of potential claim.
C. The claim was not included in the written statement of claims.
D. The Contractor did not comply with applicable notice or protest requirements of Sections 4-1.03, "Changes," 5-1.116, "Differing Site Condition," 8-1.06, "Time of Completion," 8-1.07, "Liquidated Damages," 8-1.10, "Utility and Non-Highway Facilities," and 9-1.04, "Notice of Potential Claim."

- Administrative disputes that occur after issuance of the proposed final estimate shall be included in the Contractor's written statement of claims in sufficient detail to enable the Engineer to ascertain the basis and amounts of those claims.
- The Contractor shall keep full and complete records of the costs and additional time incurred for work for which a claim for additional compensation is made. The Engineer or designated claim investigators or

auditors shall have access to those records and any other records as may be required by the Engineer to determine the facts or contentions involved in the claims. Failure to permit access to those records shall be sufficient cause for denying the claims.

- The written statement of claims submitted by the Contractor shall be accompanied by a notarized certificate containing the following language:

> Under the penalty of law for perjury or falsification and with specific reference to the California False Claims Act, Government Code Section 12650 et. seq., the undersigned,
>
> _____ .
> *(name)*
>
> _____ *of*
> *(title)*
>
> _____ .
> *(company)*
>
> hereby certifies that the claim for the additional compensation and time, if any, made herein for the work on this contract is a true statement of the actual costs incurred and time sought, and is fully documented and supported under the contract between parties.
>
> Dated _____
>
> /s/ _____
>
> Subscribed and sworn before me this _____ day
>
> of _____ .
>
> _____
> *(Notary Public)*
> My Commission
> Expires _____

- Failure to submit the notarized certificate will be sufficient cause for denying the claim.
- Claims for overhead type expenses or costs, in addition to being certified as stated above, shall be supported and accompanied by an audit report of an independent Certified Public Accountant. Omission of a supporting audit report of an independent Certified Public Accountant shall result in denial of the claim and shall operate as a bar to arbitration, as to the claim, in conformance with the requirements in Section 10240.2 of the California Public Contract Code. Claims for overhead type expenses or costs shall be subject to audit by the State at its discretion. The costs of performing an audit examination and submitting the report shall be borne by the Contractor. The Certified Public Accountant's audit examination shall be performed in conformance with the requirements of the American Institute of Certified Public Accountants Attestation Standards. The audit examination and report shall depict the Contractor's project and company-wide financial records and shall specify the actual overall average daily rates for both field and home office overhead for the entire duration of the project, and whether the costs have been properly allocated. The rates of field and home office overhead shall exclude unallowable costs as determined in Title 48 of the Federal Acquisition Regulations, Chapter 1, Part 31. The audit examination and report shall determine if the rates of field and home office overhead are:

A. Allowable in conformance with the requirements in Title 48 of the Federal Acquisition Regulations, Chapter 1, Part 31.
B. Adequately supported by reliable documentation.
C. Related solely to the project under examination.

- Costs or expenses incurred by the State in reviewing or auditing claims that are not supported by the Contractor's cost accounting or other records shall be deemed to be damages incurred by the State within the meaning of the California False Claims Act.
- If the Engineer determines that a claim requires additional analysis, the Engineer will schedule a board of review meeting. The Contractor shall meet with the review board or person and make a presentation in support of the claim. Attendance by the Contractor at the board of review meeting shall be mandatory.
- The District Director of the District that administered the contract will make the final determination of any claims which remain in dispute after completion of claim review by the Engineer or board of review meeting.

The final determination of claims will be sent to the Contractor by hand delivery or deposit in the U.S. mail. The Engineer will then make and issue the Engineer's final estimate in writing and within 30 days thereafter the State will pay the entire sum, if any, found due thereon. That final estimate shall be conclusive and binding against both parties to the contract on all questions relating to the amount of work done and the compensation payable therefor, except as otherwise provided in Sections 9-1.03C, "Records," and 9-1.09, "Clerical Errors."

- Failure of the Contractor to conform to the specified dispute procedures shall constitute a failure to pursue diligently and exhaust the administrative procedures in the contract and shall operate as a bar to arbitration in conformance with the requirements in Section 10240.2 of the California Public Contract Code.

5-1.04 PUBLIC SAFETY

The Contractor shall provide for the safety of traffic and the public in conformance with the provisions in Section 7-1.09, "Public Safety," of the Standard Specifications and these special provisions.

The Contractor shall install temporary railing (Type K) between a lane open to public traffic and an excavation, obstacle or storage area when the following conditions exist:

A. Excavations.—The near edge of the excavation is 3.6 m or less from the edge of the lane, except:

1. Excavations covered with sheet steel or concrete covers of adequate thickness to prevent accidental entry by traffic or the public.
2. Excavations less than 0.3-m deep.
3. Trenches less than 0.3-m wide for irrigation pipe or electrical conduit, or excavations less than 0.3-m in diameter.
4. Excavations parallel to the lane for the purpose of pavement widening or reconstruction.
5. Excavations in side slopes, where the slope is steeper than 1:4 (vertical:horizontal).
6. Excavations protected by existing barrier or railing.

B. Temporarily Unprotected Permanent Obstacles.—The work includes the installation of a fixed obstacle together with a protective system, such as a sign structure together with protective railing, and the Contractor elects to install the obstacle prior to installing the protective system; or the Contractor, for the Contractor's convenience and with permission of the Engineer, removes a portion of an existing protective railing at an obstacle and does not replace such railing complete in place during the same day.

C. Storage Areas.—Material or equipment is stored within 3.6 m of the lane and the storage is not otherwise prohibited by the provisions of the Standard Specifications and these special provisions.

The approach end of temporary railing (Type K), installed in conformance with the provisions in this section "Public Safety" and in Section 7-1.09, "Public Safety," of the Standard Specifications, shall be offset a minimum of 4.6 m from the edge of the traffic lane open to public traffic. The temporary railing shall be installed on a skew toward the edge of the traffic lane of not more than 0.3-m transversely to 3 m longitudinally

with respect to the edge of the traffic lane. If the 4.6-m minimum offset cannot be achieved, the temporary railing shall be installed on the 10 to 1 skew to obtain the maximum available offset between the approach end of the railing and the edge of the traffic lane, and an array of temporary crash cushion modules shall be installed at the approach end of the temporary railing.

Temporary railing (Type K) shall conform to the provisions in Section 12-3.08, "Temporary Railing (Type K)," of the Standard Specifications. Temporary railing (Type K), conforming to the details shown on 1999 Standard Plan T3, may be used. Temporary railing (Type K) fabricated prior to January 1, 1993, and conforming to 1988 Standard Plan B11-30 may be used, provided the fabrication date is printed on the required Certificate of Compliance.

Temporary crash cushion modules shall conform to the provisions in "Temporary Crash Cushion Module" of these special provisions.

Except for installing, maintaining and removing traffic control devices, whenever work is performed or equipment is operated in the following work areas, the Contractor shall close the adjacent traffic lane unless otherwise provided in the Standard Specifications and these special provisions:

Approach Speed of Public Traffic (Posted Limit) (Kilometers Per Hour)	Work Areas
Over 72 (45 Miles Per Hour)	Within 1.8 m of a traffic lane but not on a traffic lane
56 to 72 (35 to 45 Miles Per Hour)	Within 0.9-m of a traffic lane but not on a traffic lane

The lane closure provisions of this section shall not apply if the work area is protected by permanent or temporary railing or barrier.

When traffic cones or delineators are used to delineate a temporary edge of a traffic lane, the line of cones or delineators shall be considered to be the edge of the traffic lane, however, the Contractor shall not reduce the width of an existing lane to less than 3 m without written approval from the Engineer.

When work is not in progress on a trench or other excavation that required closure of an adjacent lane, the traffic cones or portable delineators used for the lane closure shall be placed off of and adjacent to the edge of the traveled way. The spacing of the cones or delineators shall be not more than the spacing used for the lane closure.

Suspended loads or equipment shall not be moved nor positioned over public traffic or pedestrians.

Full compensation for conforming to the provisions in this section "Public Safety," including furnishing and installing temporary railing (Type K) and temporary crash cushion modules, shall be considered as included in the contract prices paid for the various items of work involved and no additional compensation will be allowed therefor.

5-1.05 TESTING

Testing of materials and work shall conform to the provisions in Section 6-3, "Testing," of the Standard Specifications and these special provisions.

Whenever the provisions of Section 6-3.01, "General," of the Standard Specifications refer to tests or testing, it shall mean tests to assure the quality and to determine the acceptability of the materials and work.

The Engineer will deduct the costs for testing of materials and work found to be unacceptable, as determined by the tests performed by the Department, and the costs for testing of material sources identified by the Contractor which are not used for the work, from moneys due or to become due to the Contractor. The amount deducted will be determined by the Engineer.

5-1.06 REMOVAL OF ASBESTOS AND HAZARDOUS SUBSTANCES

When the presence of asbestos or hazardous substances are not shown on the plans or indicated in the specifications and the Contractor encounters materials which the Contractor reasonably believes to be asbestos

or a hazardous substance as defined in Section 25914.1 of the Health and Safety Code, and the asbestos or hazardous substance has not been rendered harmless, the Contractor may continue work in unaffected areas reasonably believed to be safe. The Contractor shall immediately cease work in the affected area and report the condition to the Engineer in writing.

In conformance with Section 25914.1 of the Health and Safety Code, removal of asbestos or hazardous substances including exploratory work to identify and determine the extent of the asbestos or hazardous substance will be performed by separate contract.

If delay of work in the area delays the current controlling operation, the delay will be considered a right of way delay and the Contractor will be compensated for the delay in conformance with the provisions in Section 8-1.09, "Right of Way Delays," of the Standard Specifications

5-1.07 (BLANK)

5-1.08 SUBCONTRACTOR AND DVBE RECORDS

The Contractor shall maintain records of all subcontracts entered into with certified DVBE subcontractors and records of materials purchased from certified DVBE suppliers. The records shall show the name and business address of each DVBE subcontractor or vendor and the total dollar amount actually paid each DVBE subcontractor or vendor.

Upon completion of the contract, a summary of these records shall be prepared on Form CEM-2402 (S) and certified correct by the Contractor or the Contractor's authorized representative, and shall be furnished to the Engineer.

5-1.086 PERFORMANCE OF DVBE SUBCONTRACTORS AND SUPPLIERS

The DVBEs listed by the Contractor in response to the provisions in Section 2-1.04, "Submission of DVBE Information," and Section 3, "Submission of DVBE Information and Award and Execution of Contract," of these special provisions, which are determined by the Department to be certified DVBEs, shall perform the work and supply the materials for which they are listed, unless the Contractor has received prior written authorization to perform the work with other forces or to obtain the materials from other sources.

Authorization to utilize other forces or sources of materials may be requested for the following reasons:

A. The listed DVBE, after having had a reasonable opportunity to do so, fails or refuses to execute a written contract, when the written contract, based upon the general terms, conditions, plans and specifications for the project, or on the terms of the subcontractor's or supplier's written bid, is presented by the Contractor.
B. The listed DVBE becomes bankrupt or insolvent.
C. The listed DVBE fails or refuses to perform the subcontract or furnish the listed materials.
D. The Contractor stipulated that a bond was a condition of executing a subcontract and the listed DVBE subcontractor fails or refuses to meet the bond requirements of the Contractor.
E. The work performed by the listed subcontractor is substantially unsatisfactory and is not in substantial conformance with the plans and specifications or the subcontractor is substantially delaying or disrupting the progress of the work.
F. The listed DVBE subcontractor is not licensed pursuant to the Contractor's License Law.
G. It would be in the best interest of the State.

The Contractor shall not be entitled to payment for the work or material unless it is performed or supplied by the listed DVBE or by other forces (including those of the Contractor) pursuant to prior written authorization of the Engineer.

5-1.09 SUBCONTRACTING

Attention is directed to the provisions in Section 8-1.01, "Subcontracting," of the Standard Specifications, Section 2, "Proposal Requirements and Conditions," and Section 3, "Submission of DVBE Information and Award and Execution of Contract," of these special provisions and these special provisions.

Pursuant to the provisions in Section 1777.1 of the Labor Code, the Labor Commissioner publishes and distributes a list of contractors ineligible to perform work as a subcontractor on a public works project. This list of debarred contractors is available from the Department of Industrial Relations web site at:

http://www.dir.ca.gov/dir/Labor_law/DLSE/Debar.html.

The DVBE information furnished under Section 2-1.04, \"Submission of DVBE Information,\" of these special provisions is in addition to the subcontractor information required to be furnished in Section 8-1.01, "Subcontracting," and Section 2-1.054, "Required Listing of Proposed Subcontractors," of the Standard Specifications.

Section 10115 of the Public Contract Code requires the Department to implement provisions to establish a goal for Disabled Veteran Business Enterprise (DVBE) participation in highway contracts that are State funded. As a part of this requirement:

A. No substitution of a DVBE subcontractor shall be made at any time without the written consent of the Department, and
B. If a DVBE subcontractor is unable to perform successfully and is to be replaced, the Contractor shall make good faith efforts to replace the original DVBE subcontractor with another DVBE subcontractor.

The provisions in Section 2-1.02, "Disabled Veteran Business Enterprise (DVBE)," of these special provisions that DVBEs shall be certified on the date bids are opened does not apply to DVBE substitutions after award of the contract.

5-1.10 PROMPT PROGRESS PAYMENT TO SUBCONTRACTORS

Attention is directed to the provisions in Sections 10262 and 10262.5 of the Public Contract Code and Section 7108.5 of the Business and Professions Code concerning prompt payment to subcontractors.

5-1.11 (Blank)

5-1.12 LAWS TO BE OBSERVED –

Section 7-1.01 of the Standard Spec shall be amended to read:

The Contractor shall keep fully informed of all existing and future State and Federal laws and County and Municipal ordinances and regulations which in any manner affect those engaged or employed in the work, the materials used in the work, or which in any way affect the conduct of the work, and of all such orders and decrees of bodies or tribunals having any jurisdiction or authority over the same. Contractor shall at all times observe and comply with, and shall cause all agents and employees to observe and comply with all such existing and future laws. Ordinances, regulations, orders and decrees of bodies or tribunals having any jurisdiction or authority over the work. The Contractor shall protect and indemnify the State of California, and all officers and employees thereof connected with the work against any claim, injury, or liability arising from or based on the violation of any such law, ordinance, regulation, order, or decree, whether by the Contractor, a Subcontractor or any employee, If any discrepancy or inconsistency is discovered in the plans, drawings, specification, or contract for the work in relation to any such law, ordinance, regulation, order or decree, the Contractor shall immediately report the same to the Contract manager in writing.

5-1.13 INTERFACING WITH PEDESTRIAN AND VEHICULAR TRAFFIC

Pursuant to the authority contained in Section 591 of the Vehicle Code, the department has determined that within such areas as are within the limits of the project and are open to public traffic, the Contractor shall comply with all of the requirements set forth in Divisions 11, 12, 13, 14 and 15 of the Vehicle Code. The Contractor shall take all necessary precautions for safe operations of the Contractor's equipment and the protection of the public from injury and damage from such property.

5-1.14 RECYCLE CONTENT COMPLIANCE

The contractor's signature affixed hereon and dated shall constitute certification under the penalty of perjury under the laws of the State of California that the contractor has, unless exempted, complied with the recycle of services, materials, goods and supplies program requirements of California Public Contract Code Sections 12200, 12205 and 12161.

Recycle Certification is attached as Attachment B and is hereby incorporated and made a part of this contract by reference and attachment.

5-1.15 CHILD SUPPORT COMPLIANCE (Applicable in Contracts of $100,000 or more)

A. The contractor recognizes the importance of child and family support obligations and shall fully comply with all applicable state and federal laws relating to child and family support enforcement, including, but not limited to, disclosure of information and compliance with earnings assignment orders, as provided in Chapter 8, commencing with Section 5200, of Part 5 of Division 9 of the Family Code.
B. The contractor, to the best of its knowledge, is fully complying with the earnings assignment orders of all employees and is providing the names of all new employees to the New Hire Registry maintained by the California Employment Development Department.

5-1.16 LABOR CODE REQUIREMENTS

Attention is directed to Section 7-1.01A(1), "Hours of Labor" of the Standard Specifications.

The fourth paragraph of Section 7-1.01A(2), "Prevailing Wage," of the Standard Specifications is amended to read:

The general prevailing wage rates determined by the Director of Industrial Relations for projects in Sonoma County are available at: Calif. Dept. of Transportation, Attn: Labor Compliance, P.O. Box 23660 Oakland, CA 94623-0660 Attn: Susan Samadian (510) 286-5185. The wage rates are not included in the Proposal or Contract for the project. Changes, if any, in the general prevailing wage rates will be available at the same location or from the Department of Industrial Relations' Internet Web Site at: http://www.dir.ca.gov.

The fourth paragraph of Section 7-1.01A(3), "Payroll Records of the Standard Specifications is amended to read:

If by the time the Engineer receives a bill for work performed under the contract, the Contractor has not submitted satisfactory certified payroll records for the work performed, the Department will withhold all payments due and owing the contractor pending receipt of such records. Payroll records are not to be submitted if prevailing wages are not required as outlined in these special provisions.

5-1.17 WORKERS COMPENSATION

Section 7-1.01A(6) "Workers' Compensation" of the Standard Specifications is amended to read:

By my signature on this contract, as Contractor, I certify that I am aware of the provisions of Section 3700 of the Labor Code which require every employer to be insured against liability for workers' compensation or to

undertake self insurance in accordance with the provisions of that code, and I will comply with such provisions before commencing the performance of the work of this contract.

5-1.18 PREVAILING WAGES NOT REQUIRED

Payment of prevailing wages is not required if the contract is for:

(a) $25,000 or less for public works construction project.
(b) $15,000 or less for the alteration, demolition, repair or maintenance of public works project.

5-1.19 RECORDS RETENTION CLAUSE

For the purpose of determining compliance with Public Contract Code Section 10115, et.seq. and Title 21, California Code of Regulations, Chapter 21, Section 2500 et.seq., when applicable, and other matters connected with the performance of the contract pursuant to Government Code Section 8546.7, the Contractor, subcontractors and the State shall maintain all books, documents, papers, accounting records, and other evidence pertaining to the performance of the contract, including but not limited to, the costs of administering the contract. All parties shall make such materials available at their respective offices at all reasonable times during the contract period for three years from the date of final payment under the contract. The State, the State Auditor, FHWA, or any duly authorized representative of the Federal government shall have access to any books, records, and documents of the Contractor that are pertinent to the contract for audits, examinations, excerpts, and transactions, and copies thereof shall be furnished if requested.

5-1.20 SPECIFIC STATUTORY REFERENCE

Any reference to certain statutes in this contract shall not relieve the Contractor from the responsibility of complying with all other statutes applicable to the service, work, or rental to be furnished thereunder.

5-1.21 EQUIPMENT INDEMNIFICATION

The Contractor shall indemnify the State against all loss and damage to the Contractor's property or equipment during its use under this contract and shall at the Contractor's own expense maintain such fire, theft, liability or other insurance as deemed necessary for this protection. The Contractor assumes all responsibility which may be imposed by law for property damage or personal injuries caused by defective equipment furnished under this contract or by operations of the Contractor or the Contractor's employees under this contract.

5-1.22 INCLUSIVE COSTS

The cost of employer payments to or on behalf of employees, subsistence, travel, compensation insurance premiums, unemployment contributions, social security taxes, contract bond premiums, and any other taxes or assessments INCLUDING SALES AND USE TAXES required by law or otherwise shall be included in the price bid and no additional allowance will be made thereof, unless separate payment provision should specifically so provide.

5-1.23 NON-SOLICITATION

The Contractor warrants, by execution of this contract, that no person or selling agency has been employed or retained to solicit or secure this contract upon an agreement or understanding for a commission, percentage, brokerage, or contingent fee, excepting bona fide employees or bona fide established commercial or selling agencies maintained or contracted by the Contractor for the purpose of securing business. For breach or violation of this warranty, the State shall have the right to annul this contract without liability, paying only for the value of the work actually performed, or in its discretion, to deduct from the contract price or consideration, or otherwise recover, the full amount of such commission, percentage, brokerage or contingent fee.

5-1.24 COMPLIANCE WITH ORDERS OF THE NATIONAL LABOR RELATIONS BOARD

Standard Specification 2-1.108 "COMPLIANCE WITH ORDERS OF THE NATIONAL LABOR RELATIONS BOARD" amended to read:

In accordance with Public Contract Code Section 10296, a contractor who is not a public entity, by signing this contract, hereby swears under penalty of perjury that no more than one final unappealable finding of contempt of court by a federal court has been issued against the contractor within the immediately preceding two-year period because of the contractor's failure to comply with an order of a federal court which orders the contractor to comply with an order of the National Labor Relations Board.

5-1.25 PARTIAL PAYMENT

Section 9-1.06 "Partial Payments" of the Standard Specifications is amended to read:

If the number of working days for this contract is more than 20, partial payment may be made to the Contractor from time to time during the progress of the work on the basis of the Engineer's written estimate. The estimate will include the total amount of work done to the time of such estimate and the value thereof. The value of work done will not include the value of materials furnished but not incorporated in the work.
The Department will retain 10 percent of such estimated value of the work done as part security for the fulfillment of the contract by the Contractor.
The Department will pay monthly to the Contractor, while carrying on the work, the balance not retained, as aforesaid, after deducting therefrom all previous payments and all sums to be kept or retained under the provisions of the contract. No such estimate or payment will be required to be made when, in the judgment of the Engineer, the work is not proceeding in accordance with the provisions of the contract, or when the total value of the work done since the last estimate amounts to less than five thousand dollars ($5,000).
No such estimate or payment shall be construed to be an acceptance of any defective work or improper materials.

Attention is directed to the prohibitions and penalties pertaining to unlicensed contractors as provided in Business and Professions Code Sections 7028.15(a) and 7031.

5-1.26 FINAL BILL.

Upon completion of the work, a final bill in duplicate shall be submitted to the Resident Engineer.

5-1.27 CASH DISCOUNT

The State will honor cash discounts and will make payment to the Contractor in accordance with the cash discount terms specified on the invoice, provided requirements of the contract have been met. Discount must be a minimum of 1/2 of 1% of the amount due, but not less than $25.00. If no discount is offered, the invoice should so state.

5-1.28 BUDGET DISCLAIMER

A. It is mutually understood between the parties that this contract may have been written before ascertaining the availability of congressional or legislative appropriation of funds, for the mutual benefit of both parties in order to avoid program and fiscal delays that would occur if the agreement were executed after that determination was made.
B. This agreement is valid and enforceable only if sufficient funds are made available to the State by the United States Government or the California State Legislature, for the purpose of this program. In addition, this agreement is subject to any additional restrictions, limitations, conditions, or any statute

enacted by the Congress or the State Legislature that may affect the provisions, terms, or funding of this contract in any manner.

C. It is mutually agreed that if the Congress or the State Legislature does not appropriate sufficient funds for the program, this contract shall be amended to reflect any reduction in funds.

D. The State has the option to void the contract under the 30-day cancellation clause or to amend the contract to reflect any reduction of funds.

5-1.29 RELIEF FROM MAINTENANCE AND RESPONSIBILITY

The following paragraph shall be added to Section 7-1.15 of the Standard Specifications:

The Engineer will only consider "Relief from Maintenance" requests on Minor Contracts when the Engineer has suspended the work pursuant to Section 8-1.05 "Temporary Suspension of Work"

5-1.30 TERMINATION OF CONTROL

If the control of the Contractor is terminated or he abandons the work, and the work is performed y day's labor or by another contract as provided above, he is not entitled to receive any portion of the amount to be paid under the contract until it is fully completed. After completion, if the unpaid balance exceeds the sum of the amount expended by the State in finishing the work, plus all damages sustained or to be sustained by the State, the excess not otherwise required by law to be retained shall be paid to the Contractor, but if such sum exceeds the unpaid balance, the Contractor and his surety are liable to the State for the excess. If the surety completes the contract work, as provided above, such surety shall be subrogated to money due under the contract, and to money which shall become due in the course of completion by the surety, to the extent provided by law.On the completion of the contract, the original Contractor is entitled to the return of all his unused materials, and his equipment, tools and appliances, except that he shall have no claim on account of usual and ordinary depreciation, loss, and wear and tear.

5-1.31 AREAS FOR CONTRACTOR'S USE

Attention is directed to the provisions in Section 7-1.19, "Rights in Land and Improvements," of the Standard Specifications and these special provisions.

The highway right of way shall be used only for purposes that are necessary to perform the required work. The Contractor shall not occupy the right of way, or allow others to occupy the right of way, for purposes which are not necessary to perform the required work.

No State-owned parcels adjacent to the right of way are available for the exclusive use of the Contractor within the contract limits. The Contractor shall secure, at the Contractor's own expense, areas required for plant sites, storage of equipment or materials, or for other purposes.

No area is available within the contract limits for the exclusive use of the Contractor. However, temporary storage of equipment and materials on State property may be arranged with the Engineer, subject to the prior demands of State maintenance forces and to other contract requirements. Use of the Contractor's work areas and other State-owned property shall be at the Contractor's own risk, and the State shall not be held liable for damage to or loss of materials or equipment located within such areas.

5-1.32 PAYMENTS

No partial payment will be made for any materials on hand which are furnished but not incorporated in the work.

5-1.33 SOUND CONTROL REQUIREMENTS

Sound control shall conform to these special provisions.

The noise level from the Contractor's operations, between the hours of 9:00 p.m. and 6:00 a.m., shall not exceed 86 dBa (Lmax) at a distance of 15 m.

The Contractor shall provide one "Type 1" sound level meter and one acoustic calibrator which will be used by the Department during the life of the contract. The Contractor shall provide training by a person trained in noise monitoring to one Department employee designated by the Engineer. The sound level meter shall be calibrated and certified by the manufacturer or other independent acoustical laboratory prior to delivery to the Department. The Contractor shall provide annual recalibration by the manufacturer or other independent acoustical laboratory. All equipment shall be capable of taking measurements using the A-weighting network and the "slow" response of the sound level meter. The measurement microphone shall be fitted with an appropriate windscreen. All equipment shall be returned to the Contractor at the acceptance of the contract. Equipment damaged by actions of the Department or the public shall be paid for as extra work as provided in Section 4-1.03D for the Standard Specifications.

Each internal combustion engine, used for any purpose on the job or related to the job, shall be equipped with a muffler of a type recommended by the manufacturer. No internal combustion engine shall be operated on the project without the muffler.

The noise level requirement shall apply to the equipment on the job or related to the job, including but not limited to trucks, transit mixers or transient equipment that may or may not be owned by the Contractor. The use of loud sound signals shall be avoided in favor of light warnings except those required by safety laws for the protection of personnel.

Full compensation for conforming to the requirements of this section shall be considered as included in the contract lump sum price and no additional compensation will be allowed therefor.

SECTION 6 (BLANK)

SECTION 7 (BLANK)

SECTION 8 MATERIALS

SECTION 8.1 MISCELLANEOUS

8-1.01 SUBSTITUTION OF NON-METRIC MATERIALS AND PRODUCTS

Only materials and products conforming to the requirements of the specifications shall be incorporated in the work. When metric materials and products are not available, and when approved by the Engineer, and at no cost to the State, materials and products in the United States Standard Measures which are of equal quality and of the required properties and characteristics for the purpose intended, may be substituted for the equivalent metric materials and products, subject to the following provisions:

A. Materials and products shown on the plans or in the special provisions as being equivalent may be substituted for the metric materials and products specified or detailed on the plans.
B. Before other non-metric materials and products will be considered for use, the Contractor shall furnish, at the Contractor's expense, evidence satisfactory to the Engineer that the materials and products proposed for use are equal to or better than the materials and products specified or detailed on the plans. The burden of proof as to the quality and suitability of substitutions shall be upon the Contractor and the Contractor shall furnish necessary information as required by the Engineer. The Engineer will be the sole judge as to the quality and suitability of the substituted materials and products and the Engineer's decision will be final.

C. When the Contractor elects to substitute non-metric materials and products, including materials and products shown on the plans or in the special provisions as being equivalent, the list of sources of material specified in Section 6-1.01, "Source of Supply and Quality of Materials," of the Standard Specification shall include a list of substitutions to be made and contract items involved. In addition, for a change in design or details, the Contractor shall submit plans and working drawings in conformance with the provisions in Section 5-1.02, "Plans and Working Drawings," of the Standard Specifications. The plans and working drawings shall be submitted at least 7 days before the Contractor intends to begin the work involved.

Unless otherwise specified, the following substitutions of materials and products will be allowed:

SUBSTITUTION TABLE FOR PLAIN WIRE REINFORCEMENT
ASTM Designation: A 82

METRIC SIZE SHOWN ON THE PLANS mm^2	SIZE TO BE SUBSTITUTED $inch^2$ x 100
MW9	W1.4
MW10	W1.6
MW13	W2.0
MW15	W2.3
MW19	W2.9
MW20	W3.1
MW22	W3.5
MW25	W3.9, except W3.5 in piles only
MW26	W4.0
MW30	W4.7
MW32	W5.0
MW35	W5.4
MW40	W6.2
MW45	W6.5
MW50	W7.8
MW55	W8.5, except W8.0 in piles only
MW60	W9.3
MW70	W10.9, except W11.0 in piles only
MW80	W12.4
MW90	W14.0
MW100	W15.5

SUBSTITUTION TABLE FOR BAR REINFORCEMENT

METRIC BAR DESIGNATION NUMBER[1] SHOWN ON THE PLANS	BAR DESIGNATION NUMBER[2] TO BE SUBSTITUTED
10	3
13	4
16	5
19	6
22	7
25	8
29	9
32	10
36	11
43	14
57	18

[1]Bar designation numbers approximate the number of millimeters of the nominal diameter of the bars.

[2]Bar numbers are based on the number of eighths of an inch included in the nominal diameter of the bars.

No adjustment will be required in spacing or total number of reinforcing bars due to a difference in minimum yield strength between metric and non-metric bars.

SUBSTITUTION TABLE FOR SIZES OF:

(1) STEEL FASTENERS FOR GENERAL APPLICATIONS (ASTM Designation: A 307 or AASHTO Designation: M 314, Grade 36 or 55), and

(2) HIGH STRENGTH STEEL FASTENERS, ASTM Designation: A 325 or A 449

METRIC SIZE SHOWN ON THE PLANS mm	SIZE TO BE SUBSTITUTED inch
6 or 6.35	1/4
8 or 7.94	5/16
10 or 9.52	3/8
11 or 11.11	7/16
13 or 12.70	1/2
14 or 14.29	9/16
16 or 15.88	5/8
19 or 19.05	3/4
22 or 22.22	7/8
24, 25, or 25.40	1
29 or 28.58	1-1/8
32 or 31.75	1-1/4
35 or 34.93	1-3/8
38 or 38.10	1-1/2
44 or 44.45	1-3/4
51 or 50.80	2
57 or 57.15	2-1/4
64 or 63.50	2-1/2
70 or 69.85	2-3/4
76 or 76.20	3
83 or 82.55	3-1/4
89 or 88.90	3-1/2
95 or 95.25	3-3/4
102 or 101.60	4

SUBSTITUTION TABLE FOR NOMINAL THICKNESS OF SHEET METAL

UNCOATED HOT AND COLD ROLLED SHEETS		HOT-DIPPED ZINC COATED SHEETS (GALVANIZED)	
METRIC THICKNESS shown on the plans **mm**	GAGE TO BE SUBSTITUTED **inch**	METRIC THICKNESS shown on the plans **mm**	GAGE TO BE SUBSTITUTED **inch**
7.94	0.3125	4.270	0.1681
6.07	0.2391	3.891	0.1532
5.69	0.2242	3.510	0.1382
5.31	0.2092	3.132	0.1233
4.94	0.1943	2.753	0.1084
4.55	0.1793	2.372	0.0934
4.18	0.1644	1.994	0.0785
3.80	0.1495	1.803	0.0710
3.42	0.1345	1.613	0.0635
3.04	0.1196	1.461	0.0575
2.66	0.1046	1.311	0.0516
2.28	0.0897	1.158	0.0456
1.90	0.0747	1.006 or 1.016	0.0396
1.71	0.0673	0.930	0.0366
1.52	0.0598	0.853	0.0336
1.37	0.0538	0.777	0.0306
1.21	0.0478	0.701	0.0276
1.06	0.0418	0.627	0.0247
0.91	0.0359	0.551	0.0217
0.84	0.0329	0.513	0.0202
0.76	0.0299	0.475	0.0187
0.68	0.0269	--------	--------
0.61	0.0239	--------	--------
0.53	0.0209	--------	--------
0.45	0.0179	--------	--------
0.42	0.0164	--------	--------
0.38	0.0149	--------	--------

SUBSTITUTION TABLE FOR WIRE

METRIC THICKNESS shown on the plans **mm**	WIRE THICKNESS to be substituted **inch**	GAGE NO.
6.20	0.244	3
5.72	0.225	4
5.26	0.207	5
4.88	0.192	6
4.50	0.177	7
4.11	0.162	8
3.76	0.148	9
3.43	0.135	10
3.05	0.120	11
2.69	0.106	12
2.34	0.092	13
2.03	0.080	14
1.83	0.072	15
1.57	0.062	16
1.37	0.054	17
1.22	0.048	18
1.04	0.041	19
0.89	0.035	20

SUBSTITUTION TABLE FOR PIPE PILES

METRIC SIZE SHOWN ON THE PLANS mm x mm	SIZE TO BE SUBSTITUTED inch x inch
PP 360 x 4.55	NPS 14 x 0.179
PP 360 x 6.35	NPS 14 x 0.250
PP 360 x 9.53	NPS 14 x 0.375
PP 360 x 11.12	NPS 14 x 0.438
PP 406 x 12.70	NPS 16 x 0.500
PP 460 x T	NPS 18 x T"
PP 508 x T	NPS 20 x T"
PP 559 x T	NPS 22 x T"
PP 610 x T	NPS 24 x T"
PP 660 x T	NPS 26 x T"
PP 711 x T	NPS 28 x T"
PP 762 x T	NPS 30 x T"
PP 813 x T	NPS 32 x T"
PP 864 x T	NPS 34 x T"
PP 914 x T	NPS 36 x T"
PP 965 x T	NPS 38 x T"
PP 1016 x T	NPS 40 x T"
PP 1067 x T	NPS 42 x T"
PP 1118 x T	NPS 44 x T"
PP 1219 x T	NPS 48 x T"
PP 1524 x T	NPS 60 x T"

The thickness in millimeters (T) represents an exact conversion of the thickness in inches (T").

SUBSTITUTION TABLE FOR STRUCTURAL TIMBER AND LUMBER

METRIC MINIMUM DRESSED DRY, shown on the plans mm x mm	METRIC MINIMUM DRESSED GREEN, shown on the plans mm x mm	NOMINAL SIZE to be substituted inch x inch
19x89	20x90	1x4
38x89	40x90	2x4
64x89	65x90	3x4
89x89	90x90	4x4
140x140	143x143	6x6
140x184	143x190	6x8
184x184	190x190	8x8
235x235	241x241	10x10
286x286	292x292	12x12

SUBSTITUTION TABLE FOR NAILS AND SPIKES

METRIC COMMON NAIL shown on the plans Length, mm Diameter, mm	METRIC BOX NAIL shown on the plans Length, mm Diameter, mm	METRIC SPIKE, shown on the plans Length, mm Diameter, mm	SIZE to be substituted Penny-weight
50.80 2.87	50.80 2.51	_____	6d
63.50 3.33	63.50 2.87	_____	8d
76.20 3.76	76.20 3.25	76.20 4.88	10d
82.55 3.76	82.55 3.25	82.55 4.88	12d
88.90 4.11	88.90 3.43	88.90 5.26	16d
101.60 4.88	101.60 3.76	101.60 5.72	20d
114.30 5.26	114.30 3.76	114.30 6.20	30d
127.00 5.72	127.00 4.11	127.00 6.68	40d
_____	_____	139.70 7.19	50d
_____	_____	152.40 7.19	60d

SUBSTITUTION TABLE FOR IRRIGATION COMPONENTS

METRIC TRUCK LOADING STANDPIPES WATER METERS, VALVES, BACKFLOW PREVENTERS, FLOW SENSORS, WYE STRAINERS, FILTER ASSEMBLY UNITS, PIPE SUPPLY LINES, and PIPE IRRIGATION SUPPLY LINES shown on the plans Diameter Nominal (DN): **mm**	NOMINAL SIZE to be substituted **inch**
15	1/2
20	3/4
25	1
32	1-1/4
40	1-1/2
50	2
65	2-1/2
75	3
100	4
150	6
200	8
250	10
300	12
350	14
400	16

Unless otherwise specified, substitutions of United States Standard Measures standard structural shapes corresponding to the metric designations shown on the plans and in conformance with the requirements in ASTM Designation: A 6/A 6M, Annex 2, will be allowed.

8-1.02 PREQUALIFIED AND TESTED SIGNING AND DELINEATION MATERIALS

The Department maintains the following list of Prequalified and Tested Signing and Delineation Materials. The Engineer shall not be precluded from sampling and testing products on the list of Prequalified and Tested Signing and Delineation Materials.

The manufacturer of products on the list of Prequalified and Tested Signing and Delineation Materials shall furnish the Engineer a Certificate of Compliance in conformance with the provisions in Section 6-1.07, "Certificates of Compliance," of the Standard Specifications for each type of traffic product supplied.

For those categories of materials included on the list of Prequalified and Tested Signing and Delineation Materials, only those products shown within the listing may be used in the work. Other categories of products, not included on the list of Prequalified and Tested Signing and Delineation Materials, may be used in the work provided they conform to the requirements of the Standard Specifications.

Materials and products may be added to the list of Prequalified and Tested Signing and Delineation Materials if the manufacturer submits a New Product Information Form to the New Product Coordinator at the Transportation Laboratory. Upon a Departmental request for samples, sufficient samples shall be submitted to permit performance of required tests. Approval of materials or products will depend upon compliance with the specifications and tests the Department may elect to perform.

PAVEMENT MARKERS, PERMANENT TYPE

Retroreflective With Abrasion Resistant Surface (ARS)

A. Apex, Model 921AR (100 mm x 100 mm)
B. Avery Dennison (formerly Stimsonite), Models C88 (100 mm x 100 mm), 911 (100 mm x 100 mm) and 953 (70 mm x 114 mm)
C. Ray-O-Lite, Model "AA" ARS (100 mm x 100 mm)
D. 3M Series 290 (89 mm x 100 mm)
E. 3M Series 290 PSA, with pressure sensitive adhesive pad (89 mm x 100 mm)

Retroreflective With Abrasion Resistant Surface (ARS)

(for recessed applications only)

A. Avery Dennison (formerly Stimsonite), Model 948 (58 mm x 119 mm)
B. Avery Dennison (formerly Stimsonite), Model 944SB (51 mm x 100 mm)*
C. Ray-O-Lite, Model 2002 (58 mm x 117 mm)
D. Ray-O-Lite, Model 2004 ARS (51 mm x 100 mm)*

*For use only in 114 mm wide (older) recessed slots

Non-Reflective, 100 mm Round

A. Alpine Products, "D-Dot" and "ANR" (ABS)
B. Apex Universal (Ceramic)
C. Apex Universal, Models 929 (ABS) and 929PP (Polypropylene)
D. Elgin Molded Plastics, "Empco-Lite" Model 900 (ABS)
E. Glowlite (Ceramic)
F. Hi-Way Safety, Inc., Models P20-2000W and 2001Y (ABS)
G. Interstate Sales, "Diamond Back" (ABS) and (Polypropylene)
H. Novabrite Models Cdot (White) Cdot-y (Yellow), Ceramic
I. Novabrite Models Adot-w (White) Adot-y (Yellow), (ABS)
J. Novabrite Models Pdot-w (White) Pdot-y (Yellow), Polypropylene
K. Road Creations, Model RCB4NR (Acrylic)
L. Three D Traffic Works TD10000 (ABS), TD10500 (Polypropylene)
M. Zumar Industries, "Titan TM40A" (ABS)

PAVEMENT MARKERS, TEMPORARY TYPE

Temporary Markers For Long Term Day/Night Use (6 months or less)

A. Apex Universal, Model 924 (100 mm x 100 mm)
B. Elgin Molded Plastics, "Empco-Lite" Model 901 (100 mm x 100 mm)
C. Road Creations, Model R41C (100 mm x 100 mm)
D. Vega Molded Products "Temporary Road Marker" (75 mm x 100 mm)

Temporary Markers For Short Term Day/Night Use (14 days or less)

(For seal coat or chip seal applications, clear protective covers are required)

A. Apex Universal, Model 932
B. Bunzl Extrusion, Models T.O.M., T.R.P.M., and "HH" (High Heat)
C. Hi-Way Safety, Inc., Model 1280/1281

STRIPING AND PAVEMENT MARKING MATERIAL

Permanent Traffic Striping and Pavement Marking Tape

A. Advanced Traffic Marking, Series 300 and 400
B. Brite-Line, Series 1000
C. Brite-Line, "DeltaLine XRP"
D. Swarco Industries, "Director 35" (For transverse application only)
E. Swarco Industries, "Director 60"
F. 3M, "Stamark" Series 380 and 5730
G. 3M, "Stamark" Series 420 (For transverse application only)

Temporary (Removable) Striping and Pavement Marking Tape (6 months or less)

A. Advanced Traffic Marking, Series 200
B. Brite-Line, Series 100
C. Garlock Rubber Technologies, Series 2000
D. P.B. Laminations, Aztec, Grade 102
E. Swarco Industries, "Director-2"
F. Trelleborg Industri, R140 Series
G. 3M, Series 620 "CR", and Series A750
H. 3M, Series A145, Removable Black Line Mask
(Black Tape: for use only on Asphalt Concrete Surfaces)
I. Advanced Traffic Marking Black "Hide-A-Line"
(Black Tape: for use only on Asphalt Concrete Surfaces)
J. Brite-Line "BTR" Black Removable Tape
(Black Tape: for use only on Asphalt Concrete Surfaces)
K. Trelleborg Industri, RB-140
(Black Tape: for use only on Asphalt Concrete Surfaces)

Preformed Thermoplastic (Heated in place)

A. Avery Dennison, "Hotape"
B. Flint Trading, "Premark," "Premark 20/20 Flex," and "Premark 20/20 Flex Plus"

Ceramic Surfacing Laminate, 150 mm x 150 mm

A. Safeline Industries/Highway Ceramics, Inc.

CLASS 1 DELINEATORS

One Piece Driveable Flexible Type, 1700 mm

A. Bunzl Extrusion, "Flexi-Guide Models 400 and 566"
B. Carsonite, Curve-Flex CFRM-400
C. Carsonite, Roadmarker CRM-375
D. FlexStake, Model 654 TM
E. GreenLine Models HWD1-66 and CGD1-66
F. J. Miller Industries, Model JMI-375 (with soil anchor)

Special Use Type, 1700 mm

A. Bunzl Extrusion, Model FG 560 (with 450 mm U-Channel base)
B. Carsonite, "Survivor" (with 450 mm U-Channel base)
C. Carsonite, Roadmarker CRM-375 (with 450 mm U-Channel base)
D. FlexStake, Model 604

E. GreenLine Models HWDU and CGD (with 450 mm U-Channel base)
F. Impact Recovery Model D36, with #105 Driveable Base
G. Safe-Hit with 200 mm pavement anchor (SH248-GP1)
H. Safe-Hit with 380 mm soil anchor (SH248-GP2) and with 450 mm soil anchor (SH248-GP3)

Surface Mount Type, 1200 mm

A. Bent Manufacturing Company, Masterflex Model MF-180EX-48
B. Carsonite, "Super Duck II"
C. FlexStake, Surface Mount, Models 704 and 754 TM
D. Impact Recovery Model D48, with #101 Fixed (Surface-Mount) Base
E. Three D Traffic Works "Channelflex" ID No. 522248W

CHANNELIZERS

Surface Mount Type, 900 mm

A. Bent Manufacturing Company, Masterflex Models MF-360-36 (Round) and MF-180-36 (Flat)
B. Bunzl Extrusion, Flexi-Guide Models FG300LD and FG300UR
C. Carsonite, "Super Duck" (Flat SDF-436, Round SDR-336)
D. Carsonite, "Super Duck II" Model SDCF203601MB "The Channelizer"
E. FlexStake, Surface Mount, Models 703 and 753 TM
F. GreenLine, Model SMD-36
G. Hi-Way Safety, Inc. "Channel Guide Channelizer" Model CGC36
H. Impact Recovery Model D36, with #101 Fixed (Surface-Mount) Base
I. Repo, Models 300 and 400
J. Safe-Hit, Guide Post, Model SH236SMA
K. The Line Connection, "Dura-Post" Model DP36-3 (Permanent)
L. The Line Connection, "Dura-Post" Model DP36-3C (Temporary)
M. Three D Traffic Works "Channelflex" ID No. 522053W

Lane Separation System

A. Bunzl "Flexi-Guide (FG) 300 Curb System"
B. Qwick Kurb, "Klemmfix Guide System"
C. Recycled Technology, Inc. "Safe-Lane System"

CONICAL DELINEATORS, 1070 mm

(For 700 mm Traffic Cones, see Standard Specifications)
A. Bent Manufacturing Company "T-Top"
B. Plastic Safety Systems "Navigator-42"
C. Radiator Specialty Company "Enforcer"
D. Roadmaker Company "Stacker"
E. TrafFix Devices "Grabber"
F. Three D Traffic Works "Ringtop" TD7000, ID No. 742143

OBJECT MARKERS

Type "K", 450 mm

A. Bunzl, Model FG318PE
B. Carsonite, Model SMD 615
C. FlexStake, Model 701 KM
D. Repo, Models 300 and 400

E. Safe-Hit, Model SH718SMA
F. The Line Connection, Model DP21-4K

Type "K-4" / "Q" Object Markers, 600 mm

A. Bent Manufacturing "Masterflex" Model MF-360-24
B. Bunzl Extrusion, Model FG324PE
C. Carsonite, Super Duck II
D. FlexStake, Model 701KM
E. Repo, Models 300 and 400
F. Safe-Hit, Models SH8 24SMA_WA and SH8 24GP3_WA
G. The Line Connection, Model DP21-4Q
H. Three D Traffic Works "Q" Marker, ID No. 531702W

CONCRETE BARRIER MARKERS AND
TEMPORARY RAILING (TYPE K) REFLECTORS

Impactable Type

A. ARTUK, "FB"
B. Bunzl Extrusion, Models PCBM-12 and PCBM-T12
C. Duraflex Corp., "Flexx 2020" and "Electriflexx"
D. Hi-Way Safety, Inc., Model GMKRM100
E. Plastic Safety Systems "BAM" Models OM-BARR and OM-BWAR
F. Sun-Lab Technology, "Safety Guide Light Model TM-5"
G. Three D Traffic Works "Roadguide" 9304 Series, ID No. 903176 (One-Way), ID No. 903215 (Two-Way)

Non-Impactable Type

A. ARTUK, JD Series
B. Plastic Safety Systems "BAM" Models OM-BITARW and OM-BITARA
C. Vega Molded Products, Models GBM and JD

METAL BEAM GUARD RAIL POST MARKERS

(For use to the left of traffic)
A. Bunzl Extrusion, "Mini" (75 mm x 254 mm)
B. Creative Building Products, "Dura-Bull, Model 11201"
C. Duraflex Corp., "Railrider"

CONCRETE BARRIER DELINEATORS, 400 mm

(For use to the right of traffic)
A. Bunzl Extrusion, Model PCBM T-16
B. Safe-Hit, Model SH216RBM
C. Sun-Lab Technology, "Safety Guide Light, Model TM16," (75 mm x 300 mm)
D. Three D Traffic Works "Roadguide" ID No. 904364 (White), ID No. 904390 (Yellow)

CONCRETE BARRIER-MOUNTED MINI-DRUM (260 mm x 360 mm x 570 mm)

A. Stinson Equipment Company "SaddleMarker"

SOUND WALL DELINEATOR

(Applied vertically. Place top of 75 mm x 300 mm reflective element at 1200 mm above roadway)

A. Bunzl Extrusion, PCBM S-36
B. Sun-Lab Technology, "Safety Guide Light, Model SM12," (75 mm x 300 mm)

GUARD RAILING DELINEATOR

(Place top of reflective element at 1200 mm above plane of roadway)

Wood Post Type, 686 mm

A. Bunzl Extrusion, FG 427 and FG 527
B. Carsonite, Model 427
C. FlexStake, Model 102 GR
D. GreenLine GRD 27
E. J. Miller Model JMI-375G
F. Safe-Hit, Model SH227GRD
G. Three D Traffic Works "Guardflex" TD9100 Series, ID No. 510476

Steel Post Type

A. Carsonite, Model CFGR-327 with CFGRBK300 Mounting Bracket

RETROREFLECTIVE SHEETING

Channelizers, Barrier Markers, and Delineators

A. Avery Dennison T-6500 Series (Formerly Stimsonite, Series 6200) (For rigid substrate devices only)
B. Avery Dennison WR-6100 Series
C. Nippon Carbide, Flexible Ultralite Grade (ULG) II
D. Reflexite, PC-1000 Metalized Polycarbonate
E. Reflexite, AC-1000 Acrylic
F. Reflexite, AP-1000 Metalized Polyester
G. Reflexite, Conformalight, AR-1000 Abrasion Resistant Coating
H. 3M, High Intensity

Traffic Cones, 330 mm Sleeves

A. Reflexite SB (Polyester), Vinyl or "TR" (Semi-transparent)

Traffic Cones, 100 mm and 150 mm Sleeves

A. Nippon Carbide, Flexible Ultralite Grade (ULG) II
B. Reflexite, Vinyl, "TR" (Semi-transparent) or "Conformalight"
C. 3M Series 3840

Barrels and Drums

A. Avery Dennison WR-6100
B. Nippon Carbide, Flexible Ultralite Grade (ULG) II
C. Reflexite, "Conformalight", "Super High Intensity" or "High Impact Drum Sheeting"
D. 3M Series 3810

Barricades: Type I, Medium-Intensity (Typically Enclosed Lens, Glass-Bead Element)

A. American Decal, Adcolite
B. Avery Dennison, T-1500 and T-1600 series

C. 3M Engineer Grade, Series 3170

Barricades: Type II, Medium-High-Intensity (Typically Enclosed Lens, Glass-Bead Element)

A. Avery Dennison, T-2500 Series
B. Kiwalite Type II
C. Nikkalite 1800 Series

Signs: Type II, Medium-High-Intensity (Typically Enclosed Lens, Glass-Bead Element)

A. Avery Dennison, T-2500 Series
B. Kiwalite, Type II
C. Nikkalite 1800 Series

Signs: Type III, High-Intensity (Typically Encapsulated Glass-Bead Element)

A. Avery Dennison, T-5500 and T-5500A Series
B. Nippon Carbide, Nikkalite Brand Ultralite Grade II
C. 3M Series 3870

Signs: Type IV, High-Intensity (Typically Unmetallized Microprismatic Element)

A. Avery Dennison, T-6500 Series (Formerly Stimsonite Series 6200)
B. Nippon Carbide, Crystal Grade, 94000 Series

Signs: Type VI, Elastomeric (Roll-Up) High-Intensity, without Adhesive

A. Avery Dennison, WU-6014
B. Novabrite LLC, "Econobrite"
C. Reflexite "Vinyl"
D. Reflexite "SuperBright"
E. Reflexite "Marathon"
F. 3M Series RS34 (Orange) and RS20 (Fluorescent orange)

Signs: Type VII, Super-High-Intensity (Typically Unmetallized Microprismatic Element)

A. 3M LDP Series 3924 (Fluorescent Red/Orange)
B. 3M LDP Series 3970

Signs: Type VIII, Super-High-Intensity (Typically Unmetallized Microprismatic Element)

A. Avery Dennison, T-7500 Series

Signs: Type IX, Very-High-Intensity (Typically Unmetallized Microprismatic Element)

A. 3M VIP Series 3981 Diamond Grade (Fluorescent yellow)
B. 3M VIP Series 3983 Diamond Grade (Fluorescent yellow/Green)
C. 3M VIP Series 3990 Diamond

SPECIALTY SIGNS

A. All Sign Products, STOP Sign (All Plastic), 750 mm
B. Relexite "Endurance" Work Zone Sign (with Semi-Rigid Plastic Substrate)

SIGN SUBSTRATE

Fiberglass Reinforced Plastic (FRP)

A. Fiber-Brite
B. Sequentia, "Polyplate"
C. Inteplast Group "InteCel" (13 mm for Post-Mounted CZ Signs, 1200 mm or less)

Aluminum Composite

A. Alcan Composites "Dibond Material, 2 mm" (for temporary construction signs only)
B. Mitsubishi Chemical America, Alpolic 350 (for temporary construction signs only)

SECTION 8-2. CONCRETE

8-2.01 PORTLAND CEMENT CONCRETE

Portland cement concrete shall conform to the provisions in Section 90, "Portland Cement Concrete," of the Standard Specifications and these special provisions.

References to Section 90-2.01, "Portland Cement," of the Standard Specifications shall mean Section 90-2.01, "Cement," of the Standard Specifications.

Mineral admixture shall be combined with cement in conformance with the provisions in Section 90-4.08, "Required Use of Mineral Admixtures," of the Standard Specifications for the concrete materials specified in Section 56-2, "Roadside Signs," of the Standard Specifications.

The requirements of Section 90-4.08, "Required Use of Mineral Admixture," of the Standard Specifications shall not apply to Section 19-3.025C, "Soil Cement Bedding," of the Standard Specifications.

The Department maintains a list of sources of fine and coarse aggregate that have been approved for use with a reduced amount of mineral admixture in the total amount of cementitious material to be used. A source of aggregate will be considered for addition to the approved list if the producer of the aggregate submits to the Transportation Laboratory certified test results from a qualified testing laboratory that verify the aggregate complies with the requirements. Prior to starting the testing, the aggregate test shall be registered with the Department. A registration number can be obtained by calling (916) 227-7228. The registration number shall be used as the identification for the aggregate sample in correspondence with the Department. Upon request, a split of the tested sample shall be provided to the Department. Approval of aggregate will depend upon compliance with the specifications, based on the certified test results submitted, together with any replicate testing the Department may elect to perform. Approval will expire 3 years from the date the most recent registered and evaluated sample was collected from the aggregate source.

Qualified testing laboratories shall conform to the following requirements:

A. Laboratories performing ASTM Designation: C 1293 shall participate in the Cement and Concrete Reference Laboratory (CCRL) Concrete Proficiency Sample Program and shall have received a score of 3 or better on all tests of the previous 2 sets of concrete samples.
B. Laboratories performing ASTM Designation: C 1260 shall participate in the Cement and Concrete Reference Laboratory (CCRL) Pozzolan Proficiency Sample Program and shall have received a score of 3 or better on the shrinkage and soundness tests of the previous 2 sets of pozzolan samples.

Aggregates on the list shall conform to one of the following requirements:

A. When the aggregate is tested in conformance with the requirements in California Test 554 and ASTM Designation: C 1293, the average expansion at one year shall be less than or equal to 0.040 percent; or

B. When the aggregate is tested in conformance with the requirements in California Test 554 and ASTM Designation: C 1260, the average of the expansion at 16 days shall be less than or equal to 0.15 percent.

The amounts of cement and mineral admixture used in cementitious material shall be sufficient to satisfy the minimum cementitious material content requirements specified in Section 90-1.01, "Description," or Section 90-4.05, "Optional Use of Chemical Admixtures," of the Standard Specifications and shall conform to the following:

A. The minimum amount of cement shall not be less than 75 percent by mass of the specified minimum cementitious material content.
B. The minimum amount of mineral admixture to be combined with cement shall be determined using one of the following criteria:

    1. When the calcium oxide content of a mineral admixture is equal to or less than 2 percent by mass, the amount of mineral admixture shall not be less than 15 percent by mass of the total amount of cementitious material to be used in the mix.
    2. When the calcium oxide content of a mineral admixture is greater than 2 percent by mass, and any of the aggregates used are not listed on the approved list as specified in these special provisions, then the amount of mineral admixture shall not be less than 25 percent by mass of the total amount of cementitious material to be used in the mix.
    3. When the calcium oxide content of a mineral admixture is greater than 2 percent by mass and the fine and coarse aggregates are listed on the approved list as specified in these special provisions, then the amount of mineral admixture shall not be less than 15 percent by mass of the total amount of cementitious material to be used in the mix.
    4. When a mineral admixture that conforms to the provisions for silica fume in Section 90-2.04, "Admixture Materials," of the Standard Specifications is used, the amount of mineral admixture shall not be less than 10 percent by mass of the total amount of cementitious material to be used in the mix.
    5. When a mineral admixture that conforms to the provisions for silica fume in Section 90-2.04, "Admixture Materials," of the Standard Specifications is used and the fine and coarse aggregates are listed on the approved list as specified in these special provisions, then the amount of mineral admixture shall not be less than 7 percent by mass of the total amount of cementitious material to be used in the mix.

C. The total amount of mineral admixture shall not exceed 35 percent by mass of the total amount of cementitious material to be used in the mix. Where Section 90-1.01, "Description," of the Standard Specifications specifies a maximum cementitious content in kilograms per cubic meter, the total mass of cement and mineral admixture per cubic meter shall not exceed the specified maximum cementitious material content.

SECTION 9. DESCRIPTION OF WORK

The work to be done consists, in general, of installing drainage system in Sonoma County at PM 7.8 (at the intersection of Route 116 and Bohemian Highway)
in accordance with the details shown on the plans.

Such other items or details not mentioned above that are required by the plans, Standard Specifications, or these special provisions shall be performed, placed, constructed or installed.

SECTION 10. CONSTRUCTION DETAILS

SECTION 10-1. GENERAL

10-1.01 ORDER OF WORK

Order of work shall conform to the provisions in Section 5-1.05, "Order of Work," of the Standard Specifications and these special provisions.

Attention is directed to "Maintaining Traffic" of these special provisions.

Attention is directed to "Water Pollution Control" of these special provisions regarding the submittal and approval of the "Water Pollution Control Program" prior to performing work having potential to cause water pollution.

10-1.02 WATER POLLUTION CONTROL

Water pollution control work shall conform to the provisions in Section 7-1.01G, "Water Pollution," of the Standard Specifications and these special provisions.

Water pollution control work shall conform to the requirements in the "Storm Water Pollution Prevention Plan (SWPPP) and Water Pollution Control Program (WPCP) Preparation Manual" and the "Construction Site Best Management Practices (BMPs) Manual," and addenda thereto issued up to, and including, the date of advertisement of the project. These manuals are hereinafter referred to respectively as the "Preparation Manual" and the "Construction Site BMPs Manual," and collectively, as the "Manuals." Copies of the Manuals may be obtained from the Department of Transportation, Material Operations Branch, Publication Distribution Unit, 1900 Royal Oaks Drive, Sacramento, California 95815, Telephone: (916) 445-3520, and may also be obtained from the Department's Internet website at: http://www.dot.ca.gov/hq/construc/stormwater.html.

The Contractor shall know and fully comply with applicable provisions of the Manuals, and Federal, State, and local regulations and requirements that govern the Contractor's operations and storm water and non-storm water discharges from both the project site and areas of disturbance outside the project limits during construction. Attention is directed to Sections 7-1.01, "Laws to be Observed," and 7-1.12, "Indemnification and Insurance," of the Standard Specifications.

Water pollution control requirements shall apply to storm water and non-storm water discharges from areas outside the project site which are directly related to construction activities for this contract including, but not limited to, asphalt batch plants, material borrow areas, concrete plants, staging areas, storage yards and access roads. The Contractor shall comply with the Manuals for those areas and shall implement, inspect and maintain the required water pollution control practices. Installing, inspecting and maintaining water pollution control practices on areas outside the highway right of way not specifically arranged and provided for by the Department for the execution of this contract, will not be paid for.

The Contractor shall be responsible for penalties assessed or levied on the Contractor or the Department as a result of the Contractor's failure to comply with the provisions in this section "Water Pollution Control" including, but not limited to, compliance with the applicable provisions of the Manuals, and Federal, State and local regulations and requirements as set forth therein.

Penalties as used in this section shall include fines, penalties and damages, whether proposed, assessed, or levied against the Department or the Contractor, including those levied under the Federal Clean Water Act and the State Porter-Cologne Water Quality Control Act, by governmental agencies or as a result of citizen suits. Penalties shall also include payments made or costs incurred in settlement for alleged violations of the Manuals, or applicable laws, regulations, or requirements. Costs incurred could include sums spent instead of penalties, in mitigation or to remediate or correct violations.

RETENTION OF FUNDS

Notwithstanding any other remedies authorized by law, the Department may retain money due the Contractor under the contract, in an amount determined by the Department, up to and including the entire amount of Penalties proposed, assessed, or levied as a result of the Contractor's violation of the Manuals, or Federal or State law, regulations or requirements. Funds may be retained by the Department until final disposition has been made as to the Penalties. The Contractor shall remain liable for the full amount of Penalties until such time as they are finally resolved with the entity seeking the Penalties.

Retention of funds for failure to conform to the provisions in this section, "Water Pollution Control," shall be in addition to the other retention amounts required by the contract. The amounts retained for the Contractor's failure to conform to provisions in this section will be released for payment on the next monthly estimate for partial payment following the date when an approved WPCP has been implemented and maintained, and when water pollution has been adequately controlled, as determined by the Engineer.

When a regulatory agency identifies a failure to comply with the Manuals, or other Federal, State or local requirements, the Department may retain money due the Contractor, subject to the following:

A. The Department will give the Contractor 30 days notice of the Department's intention to retain funds from partial payments which may become due to the Contractor prior to acceptance of the contract. Retention of funds from payments made after acceptance of the contract may be made without prior notice to the Contractor.
B. No retention of additional amounts out of partial payments will be made if the amount to be retained does not exceed the amount being withheld from partial payments pursuant to Section 9-1.06, "Partial Payments," of the Standard Specifications.
C. If the Department has retained funds, and it is subsequently determined that the State is not subject to the entire amount of the Costs and Liabilities assessed or proposed in connection with the matter for which the retention was made, the Department shall be liable for interest on the amount retained for the period of the retention. The interest rate payable shall be 6 percent per annum.

During the first estimate period that the Contractor fails to conform to the provisions in this section, "Water Pollution Control," the Department may retain an amount equal to 25 percent of the estimated value of the contract work performed.

The Contractor shall notify the Engineer immediately upon request from the regulatory agencies to enter, inspect, sample, monitor, or otherwise access the project site or the Contractor's records pertaining to water pollution control work. The Contractor and the Department shall provide copies of correspondence, notices of violations, enforcement actions or proposed fines by regulatory agencies to the requesting regulatory agency.

WATER POLLUTION CONTROL PROGRAM PREPARATION, APPROVAL AND AMENDMENTS

As part of the water pollution control work, a Water Pollution Control Program (WPCP) is required for this contract. The WPCP shall conform to the provisions in Section 7-1.01G, "Water Pollution," of the Standard Specifications, the requirements in the Manuals, and these special provisions. Upon the Engineer's approval of the WPCP, the WPCP shall be considered to fulfill the provisions in Section 7-1.01G, "Water Pollution," of the Standard Specifications for development and submittal of a Water Pollution Control Program.

No work having potential to cause water pollution, shall be performed until the WPCP has been approved by the Engineer. Approval shall not constitute a finding that the WPCP complies with applicable requirements of the Manuals and applicable Federal, State and local laws, regulations, and requirements.

The Contractor shall designate a Water Pollution Control Manager. The Water Pollution Control Manager shall be responsible for the preparation of the WPCP and required modifications or amendments, and shall be responsible for the implementation and adequate functioning of the various water pollution control practices employed. The Contractor may designate different Water Pollution Control Managers to prepare the WPCP and to implement the water pollution control practices. The Water Pollution Control Managers shall serve as the primary contact for issues related to the WPCP or its implementation. The Contractor shall assure that the Water Pollution Managers have adequate training and qualifications necessary to prepare the WPCP, implement and maintain water pollution control practices.

Within 5 working days after the approval of the contract, the Contractor shall submit 3 copies of the draft WPCP to the Engineer. The Engineer will have 3 working days to review the WPCP. If revisions are required, as determined by the Engineer, the Contractor shall revise and resubmit the WPCP within 2 working days of receipt of the Engineer's comments. The Engineer will have 2 working days to review the revisions. Upon the Engineer's approval of the WPCP, 4 approved copies of the WPCP, incorporating the required changes, shall be submitted to the Engineer. In order to allow construction activities to proceed, the Engineer may conditionally approve the WPCP while minor revisions are being completed. In the event the Engineer fails to complete the review within the time allowed, and if, in the opinion of the Engineer, completion of the work is delayed or interfered with by reason of the Engineer's delay in completing the review, the Contractor will be compensated for resulting losses, and an extension of time will be granted, in the same manner as provided for in Section 8-1.09, "Right of Way Delays," of the Standard Specifications.

The WPCP shall incorporate water pollution control practices in the following categories:

A. Soil stabilization.
B. Sediment control.
C. Wind erosion control.
D. Tracking control.
E. Non-storm water management.
F. Waste management and materials pollution control.

The Contractor shall develop a Water Pollution Control Schedule that describes the timing of grading or other work activities that could affect water pollution. The Water Pollution Control Schedule shall be updated by the Contractor to reflect changes in the Contractor's operations that would affect the necessary implementation of water pollution control practices.

The Contractor shall complete the BMP checklists for each of the six categories presented in Section 3 of the Preparation Manual and shall incorporate the completed checklists and water pollution control practices into Sections 30.1, 30.2, and 30.3 of the WPCP. Water pollution control practices include the "Minimum Requirements" and other Contractor-selected water pollution control practices from the BMP checklists and "Project-Specific Minimum Requirements" identified in the Water Pollution Control Cost Break-Down of this section.

The following contract items of work shall be incorporated into the WPCP as "Temporary Water Pollution Control Practices": Temporary Concrete Washout Facility (Portable). The Contractor's attention is directed to the special provisions provided for Temporary Water Pollution Control Practices.

The WPCP shall include, but not be limited to, the items described in the Manuals and related information contained in the contract documents.The Contractor shall prepare an amendment to the WPCP when there is a change in construction activities or operations which may affect the discharge of pollutants to surface waters, ground waters, municipal storm drain systems, or when the Contractor's activities or operations violate Federal, State or local regulations, or when directed by the Engineer. Amendments shall identify additional water

pollution control practices or revised operations, including those areas or operations not identified in the initially approved WPCP. Amendments to the WPCP shall be prepared and submitted for review and approval within a time approved by the Engineer, but in no case longer than the time specified for the initial submittal and review of the WPCP.

The Contractor shall keep one copy of the approved WPCP and approved amendments at the project site. The WPCP shall be made available upon request by a representative of the Regional Water Quality Control Board, State Water Resources Control Board, United States Environmental Protection Agency, or the local storm water management agency. Requests by the public shall be directed to the Engineer.

WATER POLLUTION CONTROL WORK BREAK-DOWN

Contract No. 04A2664

ITEM	ITEM DESCRIPTION	UNIT	ESTIMATED QUANTITY
SC-7	Street Sweeping and Vacuuming	LS	Lump Sum
SC-10	Storm Drain Inlet Protection	EA	4
WE-1	Wind Erosion Control	LS	Lump Sum
NS-2	Dewatering Operations	LS	Lump Sum
NS-6	Illicit Connection/Illegal Discharge Detection and Reporting	LS	Lump Sum
NS-8	Vehicle and Equipment Cleaning	LS	Lump Sum
NS-9	Vehicle and Equipment Fueling	LS	Lump Sum
NS-10	Vehicle and Equipment Maintenance	LS	Lump Sum
WM-1	Material Delivery and Storage	LS	Lump Sum
WM-2	Material Use	LS	Lump Sum
WM-3	Stockpile Management	LS	Lump Sum
WM-4	Spill Prevention and Control	LS	Lump Sum
WM-5	Solid Waste Management	LS	Lump Sum
WM-9	Sanitary/Septic Waste Management	LS	Lump Sum

If requested by the Contractor and approved by the Engineer, changes to the water pollution control practices listed in the approved work break-down, including addition of new water pollution control practices, will be allowed. Changes shall be included in the approved amendment of the WPCP. If the requested changes result in a net cost increase to the contract lump sum price, an adjustment in compensation will be made without change to the water pollution control item. The net cost increase to the water pollution control item will be paid for as extra work as provided in Section 4-1.03D, "Extra Work," of the Standard Specifications.

WPCP IMPLEMENTATION

Unless otherwise specified, upon approval of the WPCP, the Contractor shall be responsible throughout the duration of the project for installing, constructing, inspecting, maintaining, removing, and disposing of the water pollution control practices specified in the WPCP and in the amendments. Unless otherwise directed by the Engineer, the Contractor's responsibility for WPCP implementation shall continue throughout any

temporary suspension of work ordered in conformance with the provisions in Section 8-1.05, "Temporary Suspension of Work," of the Standard Specifications. Requirements for installation, construction, inspection, maintenance, removal, and disposal of water pollution control practices shall conform to the requirements in the Manuals and these special provisions.

If the Contractor or the Engineer identifies a deficiency in the implementation of the approved WPCP or amendments, the deficiency shall be corrected immediately. The deficiency may be corrected at a later date and time if requested by the Contractor and approved by the Engineer in writing, but shall be corrected prior to the onset of precipitation. If the Contractor fails to correct the identified deficiency by the date agreed or prior to the onset of precipitation, the project shall be in nonconformance with this section. Attention is directed to Section 5-1.01, "Authority of Engineer," of the Standard Specifications, and to "Retention of Funds" of this section for possible nonconformance penalties.

If the Contractor fails to conform to the provisions of this section, "Water Pollution Control," the Engineer may order the suspension of construction operations until the project complies with the requirements of this section.

Implementation of water pollution control practices may vary by season. The Construction Site BMPs Manual and these special provisions shall be followed for control practice selection of year-round, rainy season and non-rainy season water pollution control practices.

Year-Round Implementation Requirements

The Contractor shall have a year-round program for implementing, inspecting and maintaining water pollution control practices for wind erosion control, tracking control, non-storm water management, and waste management and materials pollution control.

The National Weather Service weather forecast shall be monitored and used by the Contractor on a daily basis. An alternative weather forecast proposed by the Contractor may be used if approved by the Engineer. If precipitation is predicted, the necessary water pollution control practices shall be deployed prior to the onset of the precipitation.

Disturbed soil areas shall be considered active whenever the soil disturbing activities have occurred, continue to occur or will occur during the ensuing 21 days. Nonactive areas shall be protected as prescribed in the Construction Site BMPs Manual within 14 days of cessation of soil disturbing activities or prior to the onset of precipitation, whichever occurs first.

Rainy Season Implementation Requirements

Soil stabilization and sediment control practices conforming to the requirements of these special provisions shall be provided throughout the rainy season, defined as between October 15 and April 15.

An implementation schedule of required soil stabilization and sediment control practices for disturbed soil areas shall be completed no later than 20 days prior to the beginning of each rainy season. The implementation schedule shall identify the soil stabilization and sediment control practices and the dates when the implementation will be 25 percent, 50 percent and 100 percent complete, respectively. For construction activities beginning during the rainy season, the Contractor shall implement applicable soil stabilization and sediment control practices. The Contractor shall implement soil stabilization and sediment control practices a minimum of 10 days prior to the start of the rainy season.

Non-Rainy Season Implementation Requirements

The non-rainy season shall be defined as days outside the defined rainy season. The Contractor's attention is directed to the Construction Site BMPs Manual for soil stabilization and sediment control implementation requirements on disturbed soil areas during the non-rainy season. Disturbed soil areas within the project shall be protected in conformance with the requirements in the Construction Site BMPs Manual with an effective combination of soil stabilization and sediment control.

MAINTENANCE

To ensure the proper implementation and functioning of water pollution control practices, the Contractor shall regularly inspect and maintain the construction site for the water pollution control practices identified in the WPCP. The construction site shall be inspected by the Contractor as follows:

A. Prior to a forecast storm.
B. After a precipitation event which causes site runoff.
C. At 24 hour intervals during extended precipitation events.
D. Routinely, a minimum of once every two weeks outside of the defined rainy season.
E. Routinely, a minimum of once every week during the defined rainy season.

The Contractor shall use the Storm Water Quality Construction Site Inspection Checklist provided in the Preparation Manual or an alternative inspection checklist provided by the Engineer. One copy of each site inspection record shall be submitted to the Engineer within 24 hours of completing the inspection.

REPORTING REQUIREMENTS

Report of Discharges, Notices or Orders

If the Contractor identifies discharges into surface waters or drainage systems in a manner causing, or potentially causing, a condition of pollution, or if the project receives a written notice or order from a regulatory agency, the Contractor shall immediately inform the Engineer. The Contractor shall submit a written report to the Engineer within 7 days of the discharge event, notice or order. The report shall include the following information:

A. The date, time, location, nature of the operation, and type of discharge, including the cause or nature of the notice or order.
B. The water pollution control practices deployed before the discharge event, or prior to receiving the notice or order.
C. The date of deployment and type of water pollution control practices deployed after the discharge event, or after receiving the notice or order, including additional measures installed or planned to reduce or prevent reoccurrence.
D. An implementation and maintenance schedule for affected water pollution control practices.

Report of First-Time Non-Storm Water Discharge

The Contractor shall notify the Engineer at least 3 days in advance of first-time non-storm water discharge events. The Contractor shall notify the Engineer of the operations causing non-storm water discharges and shall obtain field approval for first-time non-storm water discharges. Non-storm water discharges shall be monitored at first-time occurrences and routinely thereafter.

PAYMENT

The contract lump sum shall include full compensation for furnishing all labor, materials, tools, equipment, and incidentals for doing all the work involved in developing, preparing, obtaining approval of, revising, and amending the WPCP, as specified in the Standard Specifications and these special provisions, and as directed by the Engineer.

The contract lump sum shall include full compensation for furnishing all labor, materials, tools, equipment, and incidentals, and for doing all the work involved in installing, constructing, maintaining, removing, and disposing of water pollution control practices, including non-storm water management, and waste management and materials pollution water pollution control practices.

Section 4-1.03B, "Increased or Decreased Quantities", shall not apply to temporary drainage inlet protection.

10-1.03 TEMPORARY CONCRETE WASHOUT (PORTABLE)

A portable temporary concrete washout shall be furnished, maintained, and removed as specified in the approved Water Pollution Control Program in conformance with "Water Pollution Control" of these special provisions, and these special provisions, and as directed by the Engineer.

A portable temporary concrete washout shall consist of a commercially available drum at a minimum size of 208-liter. The drum shall be stenciled "Concrete Waste Material." The letters shall be black and 100 mm in height on a white background. The top of the stenciling shall be 300 mm from the top of the barrel.

PLACEMENT

A portable temporary concrete washout shall be as follows:

A. A portable temporary concrete washout shall be in place prior to placement of concrete and shall be located in the immediate area of the concrete work as approved by the Engineer. Temporary concrete washout shall be located away from construction traffic or public access areas. After initial placement, temporary concrete washout shall be moved as needed for concrete construction work. When temporary concrete washout is no longer required, as determined by the Engineer, temporary concrete washout shall become the property of the Contractor and shall be removed and disposed of in conformance with the provisions in Section 7-1.13, "Disposal of Material Outside the Highway Right of Way," of the Standard Specifications.
B. A sign shall be installed adjacent to each washout at a location determined by the Contractor and approved by the Engineer. Signs shall be installed in conformance with the provisions in Section 12-3.06B, "Portable Signs" of the Standard Specifications. Each portable sign shall consist of a base, framework and a sign panel. The sign panel shall be made out of plywood and shall have a minimum size of 300 mm by 900 mm. The sign panel shall read "Concrete Washout" with black letters on a white background.
C. The Contractor shall provide sufficient temporary concrete washout capacity to contain liquid and concrete waste generated by washout operations without seepage or spillage.

Maintaining portable temporary concrete washout shall include removing and disposing of concrete waste. Concrete waste materials generated shall be removed each day and disposed of in conformance with the provisions in Section 7-1.13, "Disposal of Material Outside the Highway Right of Way" of the Standard Specifications.

When relocating or transporting portable temporary concrete washout, the portable washout shall be properly secured to prevent spilling of concrete waste materials.

PAYMENT

The contract lump sum price paid for temporary concrete washout (portable) shall include full compensation for furnishing all labor, materials, tools, equipment, including sign, and incidentals, and for doing all the work involved in furnishing, placing, maintaining, repairing, replacing, transporting from location to location, disposing of concrete waste and removing temporary concrete washout (portable), as specified in the Standard Specifications and these special provisions, and as directed by the Engineer.

10-1.04 OBSTRUCTIONS

Attention is directed to Section 8-1.10, "Utility and Non-Highway Facilities," and Section 15, "Existing Highway Facilities," of the Standard Specifications and these special provisions.

The Contractor shall notify the Engineer and the appropriate regional notification center for operators of subsurface installations at least 2 working days, but not more than 14 calendar days, prior to performing any excavation or other work close to any underground pipeline, conduit, duct, wire or other structure. Regional notification centers include, but are not limited to, the following:

Notification Center	Telephone Number
Underground Service Alert-Northern California (USA)	1-800-642-2444 1-800-227-2600
Underground Service Alert-Southern California (USA)	1-800-422-4133 1-800-227-2600

10-1.05 CONSTRUCTION AREA TRAFFIC CONTROL DEVICES

Flagging, signs, and all other traffic control devices furnished, installed, maintained, and removed when no longer required shall conform to the provisions in Section 12, "Construction Area Traffic Control Devices," of the Standard Specifications and these special provisions.

Category 1 traffic control devices are defined as those devices that are small and lightweight (less than 45 kg), and have been in common use for many years. The devices shall be known to be crashworthy by crash testing, crash testing of similar devices, or years of demonstrable safe performance. Category 1 traffic control devices include traffic cones, plastic drums, portable delineators, and channelizers.

If requested by the Engineer, the Contractor shall provide written self-certification for crashworthiness of Category 1 traffic control devices. Self-certification shall be provided by the manufacturer or Contractor and shall include the following: date, Federal Aid number (if applicable), expenditure authorization, district, county, route and kilometer post of project limits; company name of certifying vendor, street address, city, state and zip code; printed name, signature and title of certifying person; and an indication of which Category 1 traffic control devices will be used on the project. The Contractor may obtain a standard form for self-certification from the Engineer.

Category 2 traffic control devices are defined as those items that are small and lightweight (less than 45 kg), that are not expected to produce significant vehicular velocity change, but may otherwise be potentially hazardous. Category 2 traffic control devices include: barricades and portable sign supports.

Category 2 devices purchased on or after October 1, 2000 shall be on the Federal Highway Administration (FHWA) Acceptable Crashworthy Category 2 Hardware for Work Zones list. This list is maintained by FHWA and can be located at the following internet address: http://safety.fhwa.dot.gov/fourthlevel/hardware/listing.cfm?code=workzone.

The Department maintains a secondary list at the following internet address: http://www.dot.ca.gov/hq/traffops/signtech/signdel/pdffiles.htm.

Category 2 devices that have not received FHWA acceptance, and were purchased before October 1, 2000, may continue to be used until they complete their useful service life or until January 1, 2003, whichever comes first. Category 2 devices in use that have received FHWA acceptance shall be labeled with the FHWA acceptance letter number and the name of the manufacturer by the start of the project. The label shall be readable. After January 1, 2003, all Category 2 devices without a label shall not be used on the project.

Full compensation for providing self-certification for crashworthiness of Category 1 traffic control devices and labeling Category 2 devices as specified shall be considered as included in the prices paid for the work requiring the use of the Category 1 or Category 2 traffic control devices and no additional compensation will be allowed therefor.

10-1.06 CONSTRUCTION AREA SIGNS

Construction area signs for temporary traffic control shall be furnished, installed, maintained, and removed when no longer required in conformance with the provisions in Section 12, "Construction Area Traffic Control Devices," of the Standard Specifications and these special provisions.

Attention is directed to "Furnish Sign" of these special provisions.

Attention is directed to the provisions in "Prequalified and Tested Signing and Delineation Materials" of these special provisions. Type II retroreflective sheeting shall not be used on construction area sign panels. Type III, IV, VII, VIII, or IX retroreflective sheeting shall be used for stationary mounted construction area sign panels.

Unless otherwise shown on the plans or specified in these special provisions, the color of construction area warning and guide signs shall have black legend and border on orange background, except W10-1 or W47(CA) (Highway-Rail Grade Crossing Advance Warning) sign shall have black legend and border on yellow background.

Repair to construction area sign panels will not be allowed, except when approved by the Engineer. At nighttime under vehicular headlight illumination, sign panels that exhibit irregular luminance, shadowing or dark blotches shall be immediately replaced at the Contractor's expense.

The Contractor shall notify the appropriate regional notification center for operators of subsurface installations at least 2 working days, but not more than 14 calendar days, prior to commencing excavation for construction area sign posts. The regional notification centers include, but are not limited to, the following:

Notification Center	Telephone Number
Underground Service Alert-Northern California (USA)	(800) 642-2444 (800) 227-2600
Underground Service Alert-Southern California (USA)	(800) 422-4133

Excavations required to install construction area signs shall be performed by hand methods without the use of power equipment, except that power equipment may be used if it is determined there are no utility facilities in the area of the proposed post holes. The post hole diameter, if backfilled with portland cement concrete, shall be at least 100 mm greater than the longer dimension of the post cross-section.

Construction area signs placed within 4.6 m from the edge of the travel way shall be mounted on stationary mounted sign supports as specified in "Construction Area Traffic Control Devices" of these special provisions.

The Contractor shall maintain accurate information on construction area signs. Signs that are no longer required shall be immediately covered or removed. Signs that convey inaccurate information shall be immediately replaced or the information shall be corrected. Covers shall be replaced when they no longer cover the signs properly. The Contractor shall immediately restore to the original position and location any sign that is displaced or overturned, from any cause, during the progress of work.

10-1.07 MAINTAINING TRAFFIC

Attention is directed to Sections 7-1.08, "Public Convenience," 7-1.09, "Public Safety," and 12, "Construction Area Traffic Control Devices," of the Standard Specifications and to the provisions in "Public Safety" of these special provisions and these special provisions. Nothing in these special provisions shall be construed as relieving the Contractor from the responsibilities specified in Section 7-1.09.

Lane closures shall conform to the provisions in section "Traffic Control System for Lane Closure" of these special provisions.

Personal vehicles of the Contractor's employees shall not be parked on the traveled way including any section closed to public traffic.

The Contractor shall notify local authorities of the Contractor's intent to begin work at least 5 days before work is begun. The Contractor shall cooperate with local authorities relative to handling traffic through the area and shall make arrangements relative to keeping the working area clear of parked vehicles.

Whenever vehicles or equipment are parked on the shoulder within 1.8 m of a traffic lane, the shoulder area shall be closed with fluorescent traffic cones or portable delineators placed on a taper in advance of the parked vehicles or equipment and along the edge of the pavement at 7.5 m intervals to a point not less than 7.5 m past the last vehicle or piece of equipment. A minimum of 9 cones or portable delineators shall be used for the

taper. A C23 (Road Work Ahead) or C24 (Shoulder Work Ahead) sign shall be mounted on a portable sign stand with flags. The sign shall be placed where designated by the Engineer.

A minimum of one paved traffic lane, not less than 3 m wide, shall be open for use by public traffic. When construction operations are not actively in progress, not less than 2 of these lanes shall be open to public traffic.

Lanes shall be closed only during the hours shown on the charts included in this section "Maintaining Traffic." Except work required under Sections 7-1.08 and 7-1.09, work that interferes with public traffic shall be performed only during the hours shown for lane closures.

Minor deviations from the requirements of this section concerning hours of work which do not significantly change the cost of the work may be permitted upon the written request of the Contractor if, in the opinion of the Engineer, public traffic will be better served and the work expedited. These deviations shall not be adopted by the Contractor until the Engineer has approved the deviations in writing.

Chart No. 1
Two Lanes Conventional Highway

Location: Westbound/Eastbound - On Route 116 – At Bohemian Highway (PM 7.8/KP 12.6)

	a.m.												p.m.												
FROM HOUR TO HOUR	12	1	2	3	4	5	6	7	8	9	10	11	12	1	2	3	4	5	6	7	8	9	10	11	12
Mondays through Thursdays	R	R	R	R	R	R	R	R	R	R	R	R	R	R	R	R	R	R	R	R	R	R	R	R	
Fridays	R	R	R	R	R	R	R	R	R	R	R	R	R	R	R	R	R	R	R	R	R	R	R	R	
Saturdays	R	R	R	R	R	R	R	R	R	R	R	R						R	R	R	R	R	R	R	
Sundays	R	R	R	R	R	R	R	R	R	R	R	R					R	R	R	R	R	R	R	R	
Day before designated legal holiday																									
Designated legal holidays																									

Legend:

R — Ona-way traffic control permitted:
1. Close one traffic lane and stop public traffic for periods not to exceed ten minutes.
2. Provide at least one traffic lane, not less than 3.3 m wide.
3. Maximun length of one-way controlshall be 800 m (.5 mile).

No work that interferes with public traffic will be allowed

REMARKS: Summertime weekend may have increase traffic due tourist activity.

10-1.08 CLOSURE REQUIREMENTS AND CONDITIONS

Lane closures shall conform to the provisions in "Maintaining Traffic" of these special provisions and these special provisions.

The term closure, as used herein, is defined as the closure of a traffic lane or lanes, including ramp or connector lanes, within a single traffic control system.

CLOSURE SCHEDULE

By noon Monday, the Contractor shall submit a written schedule of planned closures for the following week period, defined as Friday noon through the following Friday noon.

The Closure Schedule shall show the locations and times when the proposed closures are to be in effect. The Contractor shall use the Closure Schedule request forms furnished by the Engineer. Closure Schedules submitted to the Engineer with incomplete, unintelligible or inaccurate information will be returned for correction and resubmittal. The Contractor will be notified of disapproved closures or closures that require coordination with other parties as a condition of approval.

Amendments to the Closure Schedule, including adding additional closures, shall be submitted to the Engineer, in writing, at least 3 working days in advance of a planned closure. Approval of amendments to the Closure Schedule will be at the discretion of the Engineer.

The Contractor shall confirm, in writing, all scheduled closures by no later than 8:00 a.m. 3 working days prior to the date on which the closure is to be made. Approval or denial of scheduled closures will be made no later than 4:00 p.m. 2 working days prior to the date on which the closure is to be made. Closures not confirmed or approved will not be allowed.

Confirmed closures that are cancelled due to unsuitable weather may be rescheduled at the discretion of the Engineer for the following working day.

Contingency Plan

The Contractor shall prepare a contingency plan for reopening closures to public traffic. The Contractor shall submit the contingency plan for a given operation to the Engineer within one working day of the Engineer's request.

Late Reopening of Closures

If a closure is not reopened to public traffic by the specified time, work shall be suspended in conformance with the provisions in Section 8-1.05, "Temporary Suspension of Work," of the Standard Specifications. The Contractor shall not make any further closures until the Engineer has accepted a work plan, submitted by the Contractor, that will insure that future closures will be reopened to public traffic at the specified time. The Engineer will have 2 working days to accept or reject the Contractor's proposed work plan. The Contractor will not be entitled to any compensation for the suspension of work resulting from the late reopening of closures.

COMPENSATION

The Contractor shall notify the Engineer of any delay in the Contractor's operations due to the following conditions, and if, in the opinion of the Engineer, the Contractor's controlling operation is delayed or interfered with by reason of those conditions, and the Contractor's loss due to that delay could not have been avoided by rescheduling the affected closure or by judicious handling of forces, equipment and plant, the delay will be considered a right of way delay within the meaning of Section 8-1.09, "Right of Way Delays," and compensation for the delay will be determined in conformance with the provisions in Section 8-1.09:

A. The Contractor's proposed Closure Schedule is denied and his planned closures are within the time frame allowed for closures in "Maintaining Traffic" of these special provisions, except that the

Contractor will not be entitled to any compensation for amendments to the Closure Schedule that are not approved.

B. The Contractor is denied a confirmed closure.

Should the Engineer direct the Contractor to remove a closure prior to the time designated in the approved Closure Schedule, any delay to the Contractor's schedule due to removal of the closure will be considered a right of way delay within the meaning of Section 8-1.09, "Right of Way Delays," and compensation for the delay will be determined in conformance with the provisions in Section 8-1.09.

10-1.09 TRAFFIC CONTROL SYSTEM FOR LANE CLOSURES

A traffic control system shall consist of closing traffic lanes in conformance with the details shown on the plans, the provisions in Section 12, "Construction Area Traffic Control Devices," of the Standard Specifications, the provisions under "Maintaining Traffic" and "Construction Area Signs" of these special provisions, and these special provisions.

The provisions in this section will not relieve the Contractor from the responsibility to provide additional devices or take measures as may be necessary to comply with the provisions in Section 7-1.09, "Public Safety," of the Standard Specifications.

If components in the traffic control system are displaced or cease to operate or function as specified, from any cause, during the progress of the work, the Contractor shall immediately repair the components to the original condition or replace the components and shall restore the components to the original location.

When lane closures are made for work periods only, at the end of each work period, components of the traffic control system, except portable delineators placed along open trenches or excavation adjacent to the traveled way, shall be removed from the traveled way and shoulder. If the Contractor so elects, the components may be stored at selected central locations designated by the Engineer within the limits of the highway right of way.

One-way traffic shall be controlled through the project in conformance with the plan entitled "Traffic Control System for Lane Closure on Two Lane Conventional Highways" and these special provisions.

Additional advance flaggers will be required.

Utilizing a pilot car will be at the option of the Contractor. If the Contractor elects to use a pilot car, the cones shown along the centerline on the plan need not be placed. The pilot car shall have radio contact with personnel in the work area. The maximum speed of the pilot car through the traffic control zone shall be 40 kilometers per hour (25 mph).

The contract lump sum price paid for traffic control system shall include full compensation for furnishing all labor (including flagging costs), materials (including signs), tools, equipment, and incidentals, and for doing all the work involved in placing, removing, storing, maintaining, moving to new locations, replacing, and disposing of the components of the traffic control system and for furnishing and operating the pilot car, (including driver, radios, other equipment, and labor required), as shown on the plans, as specified in the Standard Specifications and these special provisions, and as directed by the Engineer.

10-1.10 TEMPORARY CRASH CUSHION MODULE

This work shall consist of furnishing, installing, and maintaining sand filled temporary crash cushion modules in groupings or arrays at each location shown on the plans, as specified in these special provisions or where designated by the Engineer. The grouping or array of sand filled modules shall form a complete sand filled temporary crash cushion in conformance with the details shown on the plans and these special provisions.

Attention is directed to "Public Safety" of these special provisions.

Whenever the work or the Contractor's operations establishes a fixed obstacle, the exposed fixed obstacle shall be protected with a sand filled temporary crash cushion. The sand filled temporary crash cushion shall be in place prior to opening the lanes adjacent to the fixed obstacle to public traffic.

Sand filled temporary crash cushions shall be maintained in place at each location, including times when work is not actively in progress. Sand filled temporary crash cushions may be removed during a work period for access to the work provided that the exposed fixed obstacle is 4.6 m or more from a lane carrying public traffic and the temporary crash cushion is reset to protect the obstacle prior to the end of the work period in which the fixed obstacle was exposed. When no longer required, as determined by the Engineer, sand filled temporary crash cushions shall be removed from the site of the work.

At the Contractor's option, the modules for use in sand filled temporary crash cushions shall be either Energite III Inertial Modules, Fitch Inertial Modules or TrafFix Sand Barrels manufactured after March 31, 1997, or equal:

A. Energite III and Fitch Inertial Modules, manufactured by Energy Absorption Systems, Inc., One East Wacker Drive, Chicago, IL 60601-2076. Telephone 1-312-467-6750, FAX 1-800-770-6755

   1. Distributor (North): Traffic Control Service, Inc., 8585 Thys Court, Sacramento, CA 95828. Telephone 1-800-884-8274, FAX 1-916-387-9734
   2. Distributor (South): Traffic Control Service, Inc., 1881 Betmor Lane, Anaheim, CA 92805. Telephone 1-800-222-8274, FAX 1-714-937-1070

B. TrafFix Sand Barrels, manufactured by TrafFix Devices, Inc., 220 Calle Pintoresco, San Clemente, CA 92672. Telephone 1-949 361-5663, FAX 1-949 361-9205

   1. Distributor (North): United Rentals, Inc., 1533 Berger Drive, San Jose, CA 95112. Telephone 1-408 287-4303, FAX 1-408 287-1929
   2. Distributor (South): Statewide Safety & Sign, Inc., P.O. Box 1440, Pismo Beach, CA 93448. Telephone 1-800-559-7080, FAX 1-805 929-5786

Modules contained in each temporary crash cushion shall be of the same type at each location. The color of the modules shall be the standard yellow color, as furnished by the vendor, with black lids. The modules shall exhibit good workmanship free from structural flaws and objectionable surface defects. The modules need not be new. Good used undamaged modules conforming to color and quality of the types specified herein may be utilized. If used Fitch modules requiring a seal are furnished, the top edge of the seal shall be securely fastened to the wall of the module by a continuous strip of heavy duty tape.

Modules shall be filled with sand in conformance with the manufacturer's directions, and to the sand capacity in kilograms for each module shown on the plans. Sand for filling the modules shall be clean washed concrete sand of commercial quality. At the time of placing in the modules, the sand shall contain not more than 7 percent water as determined by California Test 226.

Modules damaged due to the Contractor's operations shall be repaired immediately by the Contractor at the Contractor's expense. Modules damaged beyond repair, as determined by the Engineer, due to the Contractor's operations shall be removed and replaced by the Contractor at the Contractor's expense.

Temporary crash cushion modules shall be placed on movable pallets or frames conforming to the dimensions shown on the plans. The pallets or frames shall provide a full bearing base beneath the modules. The modules and supporting pallets or frames shall not be moved by sliding or skidding along the pavement or bridge deck.

A Type R or P marker panel shall be attached to the front of the crash cushion as shown on the plans, when the closest point of the crash cushion array is within 3.6 m of the traveled way. The marker panel, when required, shall be firmly fastened to the crash cushion with commercial quality hardware or by other methods determined by the Engineer.

At the completion of the project, temporary crash cushion modules, sand filling, pallets or frames, and marker panels shall become the property of the Contractor and shall be removed from the site of the work. Temporary crash cushion modules shall not be installed in the permanent work.

Temporary crash cushion modules placed in conformance with the provisions in "Public Safety" of these special provisions will not be measured nor paid for.

10-1.11 EXISTING HIGHWAY FACILITIES

The work performed in connection with various existing highway facilities shall conform to the provisions in Section 15, "Existing Highway Facilities," of the Standard Specifications and these special provisions.

ABANDON CULVERT

Existing culverts, where shown on the plans to be abandoned, shall be abandoned in place or, at the option of the Contractor, the culverts shall be removed and disposed of. Resulting openings into existing structures that are to remain in place shall be plugged with commercial quality concrete containing not less than 300 kg of cement per cubic meter.

Abandoning culverts in place shall conform to the following:

A. Culverts that intersect the side slopes shall be removed to a depth of not less than one meter measured normal to the plane of the finished side slope, before being abandoned.
B. Culverts 300 mm in diameter and larger, shall, at the Contractor's option, be backfilled with either sand, controlled low strength material or slurry cement backfill conforming to the provisions in Section 19-3.062, "Slurry Cement Backfill," of the Standard Specifications by any method acceptable to the Engineer that completely fills the pipe. Sand backfill material shall be clean, free draining, and free from roots and other deleterious substances.
C. The ends of culverts shall be securely closed by a 150 mm thick tight fitting plug or wall of commercial quality concrete.

Culverts shall not be abandoned until their use is no longer required. The Contractor shall notify the Engineer in advance of any intended culvert abandonment.

Full compensation for concrete plugs, pipe removal, structure excavation, and backfill (including sand, controlled low strength material or slurry cement backfill) shall be considered as included in the contract lump sum price paid for abandon culvert and no additional compensation will be allowed therefor.

REMOVE INLET

Existing inlets, where any portion of these structures is within one meter of the grading plane in excavation areas, or within 0.3-m of original ground in embankment areas, or where shown on the plans to be removed, shall be completely removed and disposed of.

Frames and grates shall be removed and disposed of.

Full compensation for removing and disposing frames and grates shall be considered as included in the contract lump sum price and no additional compensation will be allowed therefor.

REMOVE CORRUGATED PIPE

Existing corrugated pipe, where shown on the plans to be removed, shall be completely removed and disposed of.

10-1.12 EARTHWORK

Earthwork shall conform to the provisions in Section 19, "Earthwork," of the Standard Specifications.

Surplus excavated material shall become the property of the Contractor and shall be disposed of in conformance with the provisions in Section 7-1.13, "Disposal of Material Outside the Highway Right of Way," of the Standard Specifications.

10-1.13 ASPHALT CONCRETE

This work shall consist of furnishing and placing asphalt concrete in conformance with these special provisions.

Asphalt concrete shall be produced at an established commercial mixing plant. The aggregate and asphalt binder shall be heated and mixed thoroughly.

The maximum size aggregate shall be 19-mm

Prior to spreading asphalt concrete, a paint binder of asphaltic emulsion or of paving asphalt shall be furnished and applied uniformly to the pavement to be surfaced and to contact surfaces of cold pavement joints, curbs, gutters and to other surfaces designated by the Engineer. If paving asphalt is furnished, the paving asphalt shall be applied at a temperature of not less than 140°C or more than 175°C.

Asphalt concrete shall be spread and compacted by methods that will produce an asphalt concrete surfacing true to grade and cross section, of uniform smoothness and texture, compacted firmly and free from depressions, humps or irregularities.

Asphalt concrete to be placed in areas designated on the plans as miscellaneous areas may be spread in one layer to the required line, grade, and cross section and shall be compacted firmly.

The contract lump sum price shall include full compensation for the work performed under this section "Asphalt Concrete," including the asphalt concrete, surfacing miscellaneous areas, and paint binder.

10-1.14 PLASTIC PIPE

Plastic pipe shall conform to the provisions in Section 64, "Plastic Pipe," of the Standard Specifications.

10-1.15 DRAINAGE INLET MARKER

The Contractor shall furnish and install plastic or thermoplastic drainage inlet markers in conformance with the details and locations shown on the plans, as specified in these special provisions, and as directed by the Engineer.

The Contractor shall furnish a Certificate of Compliance to the Engineer in conformance with the provisions in Section 6-1.07, "Certificates of Compliance," of the Standard Specifications for plastic and thermoplastic drainage inlet markers. In addition, samples of each type of drainage inlet marker shall be submitted to the Engineer 10 days before placement of the markers.

Drainage inlet markers shall be plastic or thermoplastic at the option of the Contractor. Once a type is selected, the type of drainage inlet marker shall not be changed without written approval from the Engineer.

Plastic drainage inlet markers shall conform to ASTM Designations: G-53 and D-60 and the requirements as follow. The plastic material shall be white with ultraviolet inhibitors. When placed on the vertical face of a concrete curb, the plastic drainage inlet markers shall have a dome-shaped cover consisting of clear and non-yellowing polyurethane cover. Plastic drainage inlet markers shall be installed as shown on the plans with adhesives or heat as recommended by the manufacturer of the marker.

Property	Specifications	Requirements
Thickness, mm		0.65 – 1.5
Thickness (with dome), mm		1.4 – 3.0
Legend color (non-reflective)	FHWA's Color Tolerance Chart	Blue or Green (PR Color Number 3 or 4)
Background color (non-reflective)	AASHTO Designation: M249-78	White
Weathering Resistance	ASTM Designation: G-53	1500 hours without yellowing or pit

Thermoplastic drainage inlet markers shall be prefabricated, free of lead and chromium, and conform to AASHTO Designation: M249-79 and the requirements as follow. Thermoplastic drainage inlet markers shall be installed as shown on the plans with adhesives or heat as recommended by the manufacturer of the marker.

Property	Specifications	Requirements
Thickness, mm		2.0 – 4.0
Legend color (non-reflective)	FHWA's Color Tolerance Chart	Blue or Green (PR Color Number 3 or 4)
Background color (non-reflective)	AASHTO Designation: M249-78	White
Skid Resistance	ASTM Designation: E-303	60 BPN

The Contractor shall mechanically clean the surface before placing plastic or thermoplastic drainage inlet markers.

The contract lump sum price shall include full compensation for furnishing all labor, materials, tools, equipment, and incidentals, and for doing all the work involved in furnishing and installing drainage inlet markers, complete in place, as shown on the plans, as specified in the Standard Specifications, and these special provisions, and as directed by the Engineer.

10-1.16 MISCELLANEOUS IRON AND STEEL

Miscellaneous iron and steel shall conform to the provisions in Section 75, "Miscellaneous Metal," of the Standard Specifications.

SECTION 11. FINAL CLEANING UP

The Contractor's attention is directed to Section 4-1.02 of the Standard Specifications.

SECTION 12. PAYMENT

Attention is directed to the provisions in “FINAL PAYMENT AND CLAIMS” in Section 5-1.20 elsewhere in these special provisions.

In lieu of any other provisions for payment, the lump sum amount to be paid for the work shall be considered to include full compensation for furnishing all labor, tools, materials, and equipment necessary to complete the work described herein, and no additional compensation will be allowed therefor.

The State will honor cash discounts and will make payment to the Contractor in accordance with the discount terms specified on the invoice, provided requirements of the contract have been met.

Discount must be a minimum of one half of 1% of the amount due, but not less than $25.00. If no discount is offered, the invoice should so state.

If a certificate of Insurance and/or Payment/Performance Bonds are required, please return completed forms with your signed contract. See your bid proposal for requirements. If not received on time, your contract processing might be delayed and contract award could be cancelled.

A bill in triplicate shall be submitted upon completion of the work to Contract Administrator:

Mr. S. Ray Nozzari, Senior Transportation Engineer (Construction)
4030 Occidental Road, Building A
Santa Rosa, CA 995401
Telephone: (707) 566-3945

(707) 576-6741

STATE OF CALIFORNIA DEPARTMENT OF TRANSPORTATION
SUBCONTRACTING PROVISIONS/LIST
Form ADM 1511 (REV. 2/99)

NAME	**BUSINESS ADDRESS**	**DESCRIPTION OF PORTION OF WORK WHICH WILL BE DONE BY EACH CONTRACTOR***

*List each subcontractor in accordance with the "SUBCONTRACTING PROVISIONS" of this contract including any Disabled Veteran subcontractor.

*If none, bidder to write “NONE” in this space.

STATE OF CALIFORNIA·DEPARTMENT OF TRANSPORTATION

BID PROPOSAL FOR LUMP SUM BID

ADM 1508 (REV. 7/97)

Contract No. 04A2664

APPROXIMATE MAGNITUDE OF WORK

$115,000

PROPOSAL TO STATE OF CALIFORNIA

DEPARTMENT OF TRANSPORTATION

For: **Install Drainage System in Sonoma County at PM 7.8 (at the intersection of Route 116 and Bohemian Highway)**

The undersigned, as bidder, declares that the only persons or parties interested in this proposal as principals are those named herein; that this proposal is made without collusion with any other person, firm or corporation; and the bidder has carefully examined the proposed form of contract and the plans therein referred, and proposes and agrees, if this proposal is accepted, that the bidder will contract with the State of California to provide all necessary labor, materials, tools, or equipment to do all of the work specified in the contract, in the time and manner therein prescribed, and that the bidder shall take in full payment therefor the following price:

LUMP SUM _____

(IN FIGURES)

1. If the bidder is awarded the contract and refuses to execute the contract forms presented to him for signature within the time and manner required, the bidder will be liable to the Department of Transportation for actual damages resulting to the Department therefrom or 10% of the amount bid, whichever is less. Should the bidder fail to pay these damages, Caltrans may list the bidder as in default and ineligible to bid future Caltrans projects.

2. The bid of any contractor who is currently in default with Caltrans on a contract already awarded may be regarded as nonresponsive and may be rejected. Default is defined as being within a period of liquidated damages on uncompleted work or under notice to begin or complete a contract where work has not commenced within the time limit set forth in that notice or was suspended without valid cause.

BUSINESS NAME (PRINT OR TYPE)		DATE
BY (*MUST BE SIGNED BY AUTHORIZED PERSON*)	TITLE	BUSINESS PHONE
BUSINESS ADDRESS (STREET/P.O. BOX, CITY, STATE, ZIP)		

STATE CONTRACTOR'S LICENSE BOARD LICENSE NO.:	STATE CONTRACTOR'S LICENSE BOARD LICENSE CLASSIFICATION:	FED I.D. NO./ SOC. SEC. NO.:

CALTRANS BIDDER -DVBE - INFORMATION

CO./RTE./P.M. _____
CONTRACT NO. 04A2664
BID AMOUNT $ _____
BID OPENING DATE _____
BIDDER'S NAME _____

This information shall be submitted with your bid proposal.

DVBE GOAL FROM CONTRACT 3%

CONTRACT ITEM NO.	Item of Work and Description of Work or services to be subcontracted or materials to be provided**	FOR CALTRANS USE ONLY	Name of DVBEs (DVBEs must be certified on the date bids are opened) (indicate Second and Lower Tier Subs)	FOR CALTRANS USE ONLY	Dollar Amount ***	Dollar Amount ***	Dollar Amount *** DVBE
				Total Claimed Participation	$_ _ _ _

DVBE INFORMATION
GOOD FAITH EFFORTS

All bidders shall submit the following information to demonstrate that a good faith effort to meet the DVBE goals has been made if their CALTRANS BIDDER - DVBE - INFORMATION form indicates that the DVBE goals will not be met.

Even if the bidders CALTRANS BIDDER - DVBE - INFORMATION form indicates the DVBE goals will be met, bidders should submit the following information to protect their eligibility for award of the contract. This is important because the submittal of only the CALTRANS BIDDER - DVBE - INFORMATION form will not normally provide sufficient information to demonstrate that a good faith effort was made. A bidder may not meet the DVBE goals after the submittal is analyzed by Caltrans for various reasons, e.g., if the subcontractor submitted by the bidder was not certified on the date bids were opened, or if the bidder made a mathematical error.

The following items are listed in Section 3-1.01A of the Special Provisions:

1. The Department was contacted to identify DVBEs:
   (Caltrans Business Enterprise Department - by phone of fax or internet pages)
   Person(s) Contacted — Dates of Contact

2. Other State and Federal agencies and local DVBE organizations that were contacted to identify DVBEs:
   (OFFICE OF SMALL BUSINESS CERTIFICATION AND RESOURCES "Resource package" for listings)
   Agencies and Organizations and Persons Contacted — Dates of Contact

3. The names and dates of advertisement in trade papers and papers focusing on DVBEs:
   (Enclose copies of advertisements)
   Papers — Dates of Advertisement

4. The names of all potential DVBEs to whom invitations to bid were submitted:
(List names and attach copies of faxs, letters and any logs)

Names of DVBEs	Dates of Submittals

5. The names of all available DVBEs who were considered for this project:
(List names of companies your company considered)

Names of DVBEs Considered

NOTE: USE ADDITIONAL SHEETS OF PAPER IF NECESSARY. APPROPRIATE DOCUMENTATION SUCH AS COPIES OF NEWSPAPER ADS, LETTERS SOLICITING BIDS, AND TELEPHONE LOGS SHOULD ACCOMPANY THIS FORM.

STATE OF CALIFORNIA

DEPARTMENT OF GENERAL SERVICES
OFFICE OF PROJECT MANAGEMENT AND DEVELOPMENT

SMALL BUSINESS PREFERENCE AND CERTIFICATION REQUEST

(For Construction Contractors Only)

CONTRACT NO. 04A2664

STD. 811 (REV. 6-2001)

READ BEFORE SIGNING

(THIS REQUEST MUST REMAIN WITH THE BID PACKAGE)

- 1. **PENALTY ASSESSMENT**
  A business will be assessed a penalty and be ineligible to transact any business with the Department for furnishing incorrect supporting information. (Title 2 of California Code of Regulations)

- 2. **PUBLIC WORKS AGREEMENTS EXCEEDING $100,000 AND REQUIRING TYPES "A OR "B" CONTRACTORS LICENSE.**
  On public works agreements where the lowest responsible bid exceeds $100,000, and the work to be performed requires a type "A" or "B" contractor's license and two or more subcontractors will be used, preferences will only be granted to those small business bidders who certify, under penalty of perjury, that at least fifty percent (50%) of subcontractors utilized on the job are certified small businesses. In meeting the 50% requirement, bidders may use certified small business and/or small businesses that have applied for certification no later than 5:00 p.m. on the bid opening date and are subsequently granted certification. The 50% small business subcontractor utilization shall be maintained through the term of the contract.

- 3. **JOINT BIDDERS/COMBINATION BIDDERS**
  Bidders bidding jointly or as a combination of several business organizations are especially cautioned that such bidders must be jointly licensed and approved in the form and style in which the bid is executed.

- 4. **NAME STYLE**
  The Small Business Preference and Certification Request must be signed in the same name style in which the bidder is licensed by the Contractor's State License Board.

BIDDER'(S') LEGAL NAME SYTLE	FEDERAL EMPLOYER IDENTIFICATION NUMBER
	OSBCR CERTIFICATION NUMBER

CERTIFICATION

- 5. The undersigned hereby requests preference as a "SMALL BUSINESS" and further certifies under penalty of perjury, that the firm still meets the requirements of Section 1896(L) Title 2 of California Code of Regulations. Acompleted form STD-813 meeting all applicable requirements must be on file in the Office of Small Business Certification and Resources (OSBCR) by 5:00 p.m. of the bid opening date. The form STD-813 may be obtained from the OSBCR Office at 707 Third Street, 1st Floor, Room 400, West Sacramento, CA 95605, or can be downloaded at *www.dgs.ca.gov/osbcr*.

BIDDER'S SIGNATURE	DATE SIGNED

- 6. **BIDDERS RECEIVING BONDING ASSISTANCE**
  In the event the bidder has received assistance in obtaining bonding for this project, he/she shall set forth the name and nature of the firm providing such assistance. Should the firm be listed as a subcontractor, bidder shall set forth the percentage of the contract to be performed by the subcontractor.

NAME OF FIRM PROVIDING BONDING ASSISTANCE

NATURE OF FIRM PROVIDING BONDING ASSISTANCE

SUBCONTRACTOR ASSISTANCE

☐ YES • Percentage _____ ☐ NO

PUBLIC CONTRACT CODE SECTION 10162 - QUESTIONNAIRE

In accordance with Public Contract Code Section 10162, the bidder shall complete, under penalty of perjury, the following questionnaire:

Has the bidder, any officer of the bidder, or any employee of the bidder who has a proprietary interest in the bidder, ever been disqualified, removed, or otherwise prevented from bidding on, or completing a federal, state or local government project because of a violation of law or safety regulation? If the answer is yes, attach an explanation.

☐ Yes ☐ No

PUBLIC CONTRACT CODE SECTION 10285.1 STATEMENT

In accordance with Public Contract Code Section 10285.1, bidder shall complete, under penalty of perjury, the following statement:

Has the bidder been convicted within the preceding three years of any offenses referred to in Public Contract Code Section 10285.1, including any charge of fraud, bribery, collusion, conspiracy, or any other act in violation of any state or federal antitrust law in connection with the bidding upon, award of or performance of, any public works contract, as defined in Public Contract Code Section 1101, with any public entity as defined in Public Contract Code Section 1100, including the Regents of the University of California or the Trustees of the California State University? The term "bidder" is understood to include any partner, member officer, director, responsible officer, or responsible managing employee thereof, as referred to in Section 10285.1.

☐ Yes ☐ No

NONCOLLUSION AFFIDAVIT

(Title 23 United States Code Section 112 and
Public Contract Code Section 7106)

In accordance with Title 23, United States Code, Section 112, and Public Contract Code 7106 if federally funded, or Public Contract Code 7106 if state funded, the bidder declares that the bid is not made in the interest of, or on behalf of, any undisclosed person, partnership, company, association, organization, or corporation; that the bid is genuine and not collusive or sham; that the bidder has not directly or indirectly induced or solicited any other bidder to put in a false or sham bid, and has not directly or indirectly colluded, conspired, connived, or agreed with any bidder or anyone else to put in a sham bid, or that anyone shall refrain from bidding; has not in any manner, directly or indirectly, sought by agreement, communication, or conference with anyone to fix the bid price of the bidder or any other bidder, or to fix any overhead, profit, or cost element of the bid price, or of that of any other bidder, or to secure any advantage against the public body awarding the contract of anyone interested in the proposed contract; that all statements contained in the bid are true; and, further, that the bidder has not, directly or indirectly, submitted his or her bid price or any breakdown thereof, or the contents thereof, or divulged information or data relative thereto, or paid, and will not pay, any fee to any corporation, partnership, company, association, organization, bid depository, or to any member or agent thereof to effectuate a collusive or sham bid.

Note: The above Noncollusion Affidavit is part of the Proposal. Signing this Proposal on the signature portion thereof shall also constitute signature of the Noncollusion Affidavit. Bidders are cautioned that making a false certification may subject the certifier to criminal prosecution.

IMPORTANT

CALIFORNIA COMPANY PREFERENCE

To be filled in and signed by all bidders.
Failure to fill out and sign this form may be cause for rejection of your bid.

The undersigned hereby states that he or she is or is not as designated below a "California company" in accordance with the provisions in the section entitled "California Company Preference" of the special provisions and Section 6107 of the Public Contract Code. (Check the appropriate box.)

☐ **I am a "California company".**

If "I am a 'California company' " was checked and you qualify as such by virtue of having your principal place of business in a state in which there is no local contractor preference on construction contracts indicate which state:

STATE OF

_____

If "I am a 'California company' " was checked and you qualify as such by virtue of having your principal place of business in a state in which there is a local contractor construction preference and you have paid not less than $5,000 in sales and use taxes to California for construction related activity for each of the five years immediately preceding the submission of the bid indicate your sales and use tax number:

CALIFORNIA SALES AND USE TAX NUMBER.

_____

☐ **I am not a "California company".**

If "I am not a 'California company' " was checked, indicate your state of residence, and the amount of preference given to local contractors in your state of residency on its public entity construction contracts.

STATE OF

_____

PERCENT

_____

Please explain if either percent or dollars is used to determine amount of preference.

WITH A MAXIMUM OF

$_____

I certify under penalty of perjury under the laws of the State of California that the foregoing is true and correct.

SIGNATURE OF BIDDER	DATE

CONTRACT NO. 04A2664

STATE OF CALIFORNIA·

DEPARTMENT OF TRANSPORTATION

BIDDER'S BOND

ADM-2010 (REV. 8/97)

We _____

_____

_____ as Principal, and

_____

_____

as Surety are bound unto the State of California, Department of Transportation, hereafter referred to as "Obligee", in the penal sum of ten percent (10%) of the total amount of the bid of the Principal submitted to the Obligee for the work described below, for the payment of which sum we bind ourselves, jointly and severally,

THE CONDITION OF THIS OBLIGATION IS SUCH, THAT:

WHEREAS, the Principal is submitting a bid to the Obligee, for _____

_____

(Copy here the exact description of work, including location, as it appears on the proposal)

for which bids are to be opened at _____

(Insert place where bids will be opened)

_____ on _____ .

(Insert date of bid opening)

NOW, THEREFORE, if the Principal is awarded the contract and, within the time and manner required under the specifications, after the prescribed forms are presented to him for signature, enters into a written contract, in the prescribed form, in accordance with the bid, and files two bonds with the Obligee, one to guarantee faithful performance of the contract and the other to guarantee payment for labor and materials as provided by law, then this obligation shall be null and void; otherwise, it shall remain in full force.

In the event suit is bought upon this bond by the Obligee and judgment is recovered, the Surety shall pay all costs incurred by the Obligee in such suit, including a reasonable attorney's fee to be fixed by the court.

Dated: _____ , 20 ___ .

Correspondence or claims relating to this bond should be sent to the surety at the following address:

_____

_____

_

_____

_

_____

_____

Principal

_____

Surety

By _____

Attorney-in-Fact

CERTIFICATE OF ACKNOWLEDGMENT

State of California

County of _____ SS

On this _____ day of _____ in the year 20 before me, a notary public

in and for the county and state aforesaid, personally appeared _____,

Attorney-in-Fact

known to me to be the person whose name is subscribed to the within instrument and known to me to be the Attorney-in-Fact of_____,

and acknowledged to me that he (she) subscribed the name of the said company thereto as surety, and his (her) own name as Attorney-in-Fact.

(SEAL)

_____

Notary Public

CONTRACT NO. 04A2664

STATE OF CALIFORNIA· DEPARTMENT OF TRANSPORTATION

PAYMENT BOND

(Section 3247, Civil Code)
ADM-2009 (REV. 8/97)

Bond No. _____

WHEREAS, the State of California, Department of Transportation, hereafter referred to as "Obligee", has awarded to Contractor

_____ hereafter referred to as "Principal", a contract for the work described as follows:

AND, WHEREAS, said Principal is required to furnish a bond in connection with said contract, to secure the payment of claims of laborers, mechanics, material men and other persons as provided by law.

NOW, THEREFORE, we the undersigned Principal and Surety are bound unto the Obligee in the sum of

_____dollars

($_____) for which payment we bind ourselves, jointly and severally.

THE CONDITION OF THIS OBLIGATION IS SUCH,

That if said Principal or its subcontractors shall fail to pay any of the persons named in Civil Code Section 3181, or amounts due under the Unemployment Insurance Code with respect to work or labor performed by such claimant, or any amounts required to be deducted, withheld, and paid over to the Franchise Tax Board from the wages of employees of the Principal and his subcontractors pursuant to Section 18806 of the Revenue and Taxation Code, with respect to such work and labor, that the surety herein will pay for the same in an amount not exceeding the sum specified in this bond, otherwise the above obligation shall be void. In case suit is brought upon this bond, the surety will pay a reasonable attorney's fee to be fixed by the court.

This bond shall inure to the benefit of any of the persons named in Civil Code Section 3181 as to give a right of action to such persons or their assigns in any suit brought upon this bond.

Dated: _____, 20_____ .

Correspondence or claims relating to this bond should be sent to the surety at the following address:
_____
_____
_____
_____

_____

_____
Principal

_____
Surety

By _____
Attorney-in-Fact

NOTE: Signatures of those executing for the surety must be properly acknowledged.

CERTIFICATE OF ACKNOWLEDGMENT

State of California
County of _____ SS

On this_____ day of _____in the year 20 _____before me _____ , personally appeared _____ ,
Attorney-in-Fact
personally known to me (or proved to me on the basis of satisfactory evidence) to be the person whose name is subscribed to this instrument as the Attorney-in-Fact of _____, and acknowledged to me that he (she) subscribed the name of the said company thereto as surety, and his (her) own name as Attorney-in-Fact.

(SEAL)

_____
Notary Public

CONTRACT NO. 04A2664

STATE OF CALIFORNIA· DEPARTMENT OF TRANSPORTATION

PERFORMANCE BOND

(To Accompany Contract)
ADM-2008 (REV. 8/97)

KNOW ALL MEN BY THESE PRESENTS, Bond No. _____

THAT WHEREAS, The State of California, acting by and through the Department of Transportation, has awarded to

as principal, hereinafter designated as the "Contractor", a contract for the work described as follows:

AND WHEREAS, The Contractor is required to furnish a bond in connection with said contract guaranteeing the faithful performance thereof:

NOW THEREFORE, We the undersigned Contractor and surety are held and firmly bound unto the State of California, in the sum of_____Dollars($_____), to be paid to the said State or its certain attorney, its successors and assigns, for which payment, well and truly to be made, we bind ourselves, our heirs, executors and administrators, successors or assigns, jointly and severally, firmly by these presents.

THE CONDITION OF THIS OBLIGATION IS SUCH,

That if the above bound Contractor, his or its heirs, executors, administrators, successors or assigns, shall in all things stand to and abide by, and well and truly keep and perform the covenants, conditions and agreements in the foregoing contract and any alteration thereof made as therein provided, on his or their part to be kept and performed at the time and in the manner therein specified, and in all respects according to their true intent and meaning, and shall indemnify and save harmless the State of California, its officers and agents, as therein stipulated, then this obligation shall become and be null and void; otherwise, it shall be and remain in full force and virtue.

IN WITNESS WHEREOF, We have hereunto set our hands and seals on this_____ day of _____ , 20_____.

Correspondence or claims relating to this bond should be sent to the surety at the following address:
_____
_____
_____
_____
_

_____

_____
Principal

_____(SEAL)
Surety

By _____
Attorney-in-Fact

NOTE: Signatures of those executing for the surety must be properly acknowledged, and a Power of Attorney attached.

CERTIFICATE OF ACKNOWLEDGMENT

State of California
County of _____ SS

On this_____ day of _____in the year 20 _____before me, a notary public in and for the county and state aforesaid, personally appeared _____
_____.
Attorney-in-Fact
Known to me to be the person whose name is subscribed to the within instrument and known to me to be the Attorney-in-Fact of _____ and acknowledged to me that he subscribed the name of the said company thereto as surety, and his own name as Attorney-in-Fact.

(SEAL)

_____
Notary Public

STATE OF CALIFORNIA-DEPARTMENT OF FINANCE

PAYEE DATA RECORD

(Required when receiving payment from the State of California in lieu of IRS W-9)

STD. 204 (Rev. 6-2003)

1

INSTRUCTIONS: Complete all information on this form. Sign, date, and return to the State agency (department/office) address shown at the bottom of this page. Prompt return of this **fully completed** form will prevent delays when processing payments. Information provided in this form will be used by State agencies to prepare Information Returns (1099). See reverse side for more information and Privacy Statement.

NOTE: Governmental entities, federal, State, and local (including school districts), are not required to submit this form.

2

PAYEE'S LEGAL BUSINESS NAME (Type or Print)	
SOLE PROPRIETOR – ENTER NAME AS SHOWN ON SSN (Last, First, M.I.)	**E-MAIL ADDRESS**
MAILING ADDRESS	**BUSINESS ADDRESS**
CITY, STATE, ZIP CODE	**CITY, STATE, ZIP CODE**

3

PAYEE ENTITY TYPE

CHECK ONE BOX ONLY

ENTER FEDERAL EMPLOYER IDENTIFICATION NUMBER (FEIN): ☐☐ - ☐☐☐☐☐☐☐

☐ **PARTNERSHIP**

☐ **ESTATE OR TRUST**

CORPORATION:

☐ **MEDICAL** (e.g., dentistry, psychotherapy, chiropractic, etc.)

☐ **LEGAL** (e.g., attorney services)

☐ **EXEMPT** (nonprofit)

☐ **ALL OTHERS**

☐ **INDIVIDUAL OR SOLE PROPRIETOR ENTER SOCIAL SECURITY NUMBER:** ☐☐☐ - ☐☐ - ☐☐☐☐

(SSN required by authority of California Revenue and Tax Code Section 18646)

NOTE: Payment will not be processed without an accompanying taxpayer I.D. number

4

PAYEE RESIDENCY STATUS

☐ California resident - Qualified to do business in California or maintains a permanent place of business in California.

☐ California nonresident (see reverse side) - Payments to nonresidents for services may be subject to State income tax withholding.

- ☐ No services performed in California.
- ☐ Copy of Franchise Tax Board waiver of State withholding attached.

5

I hereby certify under penalty of perjury that the information provided on this document is true and correct.
Should my residency status change, I will promptly notify the State agency below.

AUTHORIZED PAYEE REPRESENTATIVE'S NAME (Type or Print)		**TITLE**
SIGNATURE	**DATE**	**TELEPHONE** ( )

6

Please return completed form to:

Department/Office: _____

Unit/Section: _____

Mailing Address: _____

City/State/Zip: _____

Telephone: ( ) _____ **Fax:** ( ) _____

E-mail Address: _____

PAYEE DATA RECORD

1

Requirement to Complete Payee Data Record, STD. 204

A completed Payee Data Record, STD. 204, is required for payments to all non-governmental entities and will be kept on file at each State agency. Since each State agency with which you do business must have a separate STD. 204 on file, it is possible for a payee to receive this form from various State agencies.

Payees who do not wish to complete the STD. 204 may elect to not do business with the State. If the payee does not complete the STD. 204 and the required payee data is not otherwise provided, payment may be reduced for federal backup withholding and nonresident State income tax withholding. Amounts reported on Information Returns (1099) are in accordance with the Internal Revenue Code and the California Revenue and Taxation Code.

2

Enter the payee's legal business name. Sole proprietorships must also include the owner's full name. An individual must list his/her full name. The mailing address should be the address at which the payee chooses to receive correspondence. Do not enter payment address or lock box information here.

3

Check the box that corresponds to the payee business type. Check only one box. Corporations must check the box that identifies the type of corporation. The State of California requires that all parties entering into business transactions that may lead to payment(s) from the State provide their Taxpayer Identification Number (TIN). The TIN is required by the California Revenue and Taxation Code Section 18646 to facilitate tax compliance enforcement activities and the preparation of Form 1099 and other information returns as required by the Internal Revenue Code Section 6109(a).

The TIN for individuals and sole proprietorships is the Social Security Number (SSN). Only partnerships, estates, trusts, and corporations will enter their Federal Employer Identification Number (FEIN).

4

Are you a California resident or nonresident?

A corporation will be defined as a "resident" if it has a permanent place of business in California or is qualified through the Secretary of State to do business in California.

A partnership is considered a resident partnership if it has a permanent place of business in California. An estate is a resident if the decedent was a California resident at time of death. A trust is a resident if at least one trustee is a California resident.

For individuals and sole proprietors, the term "resident" includes every individual who is in California for other than a temporary or transitory purpose and any individual domiciled in California who is absent for a temporary or transitory purpose. Generally, an individual who comes to California for a purpose that will extend over a long or indefinite period will be considered a resident. However, an individual who comes to perform a particular contract of short duration will be considered a nonresident.

Payments to all nonresidents may be subject to withholding. Nonresident payees performing services in California or receiving rent, lease, or royalty payments from property (real or personal) located in California will have 7% of their total payments withheld for State income taxes. However, no withholding is required if total payments to the payee are $1,500 or less for the calendar year.

For information on Nonresident Withholding, contact the Franchise Tax Board at the numbers listed below:

Withholding Services and Compliance Section:	1-888-792-4900	E-mail address:	wscs.gen@ftb.ca.gov
For hearing impaired with TDD, call:	1-800-822-6268	Website:	www.ftb.ca.gov

5

Provide the name, title, signature, and telephone number of the individual completing this form. Provide the date the form was completed.

6

This section must be completed by the State agency requesting the STD. 204.

Privacy Statement

Section 7(b) of the Privacy Act of 1974 (Public Law 93-579) requires that any federal, State, or local governmental agency, which requests an individual to disclose their social security account number, shall inform that individual whether that disclosure is mandatory or voluntary, by which statutory or other authority such number is solicited, and what uses will be made of it.

It is mandatory to furnish the information requested. Federal law requires that payment for which the requested information is not provided is subject to federal backup withholding and State law imposes noncompliance penalties of up to $20,000.

You have the right to access records containing your personal information, such as your SSN. To exercise that right, please contact the business services unit or the accounts payable unit of the State agency(ies) with which you transact that business. All questions should be referred to the requesting State agency listed on the bottom front of this form.

STATE OF CALIFORNIA-DEPARTMENT OF TRANSPORTATION

RECYCLE CONTENT CERTIFICATION

ADM 2038 (Rev 10/98)

California Public Contract Code Section 10354 requires contractors and bidders to identify the recycled content of each commodity (products, goods, material, supplies) provided to the State to satisfy the requirements of this contract. The contractor/bidder shall identify both the postconsumer and secondary material content of each commodity even if the commodity contains no recycled material or contains less than the minimum percentage specified in California Public Contract Code Sections 12161 and 12200 to be considered a "recycled product."

Contractor/Bidder Name	Address	
Telephone	FAX	Date
Printed Name of Person Completing Form	Title	Signature of Person Completing Form

Product Description(1)	Postconsumer Material Content (%)(2)	Secondary Material Content (%)(3)	Virgin Material Content (%)(4)	Total Material Content (%)(5)	Product Category(6)	Quantity (#)(7)	Unit of Measure (#)(8)	Dollar Amount ($)(9)
				100				
				100				
				100				
				100				
				100				
				100				
				100				

If the contract does not require any commodities to be provided, indicate N/A under "Product Description."

If the product(s) that you are providing do not contain any recycled content, indicate "100" under Virgin Material column.

The numbers in the postconsumer, secondary, and virgin material columns must add up to 100 percent.

Please see footnotes on Sheet 2 for additional instructions.

STATE OF CALIFORNIA-DEPARTMENT OF TRANSPORTATION

RECYCLE CONTENT CERTIFICATION

ADM 2038 (Rev 10/98)

FOOTNOTES

(1) Please identify the product being provided and a brief description of the product.

(2) Postconsumer material is defined as “a finished material which would have been disposed of as a solid waste, having completed its life cycle as a consumer item and does not include manufacturing wastes.” Examples of this material are any recyclables (paper, plastic, glass, motor oil, etc.) that are placed at the curb for collection or dropped off at a recycling center that are used to manufacture new products.

(3) Secondary material is defined as “fragments of finished products or finished products of a manufacturing process, which has converted a resource into a commodity of real economic value, but does not include excess virgin resources of the manufacturing process. Examples of secondary material include paper converting scrap that does not leave the manufacturing or converting facility, overruns or manufacturing waste that does not get out of a plant, or any other type of product or material that never gets to the end-user, but instead is mixed into the feedstock and used to manufacture new products.

NOTE: Secondary material DOES NOT include postconsumer material. FOR EXAMPLE, if a Fine Printing and Writing paper contained 20% postconsumer material, you would indicate 20 in the postconsumer colunm and 80 in the virgin column. If the product had 40% secondary material and 20% postconsumer material, you would indicate 40 in the secondary column, 20 in the postconsumer column, and 40 in the virgin column.

(4) Virgin material is the component of the product made from non-recycled material; that is, it is neither postconsumer nor secondary material.

(5) The addition of the virgin column, the postconsumer column, and the secondary column must equal 100 percent.

(6) Product category refers to one of eleven product categories identified in Public Contract Code 12205 for State agencies to obtain purchase goals. The product categories are fine printing and writing paper, paper products, plastic products, glass products, compost and co-compost, lubricating oil, paint, solvent, steel, tires, and tire-derived products. If the product does not fit into any of the product categories, put N/A.

Fine Printing and Writing Papers (FPWP) include all papers that are typically written on such as copy and xerographic paper, envelopes, tablets, notepads, notebooks, etc.

Paper products refer to all other non-writing papers products such as paper towel, tissue, boxes, file folders, publications.

If a product is made from multiple material types, please place the product in the product category of the material that comprises the majority (either by weight or volume) of the product.

(7) Please identify the quantity of the product(s) being provided.

(8) Please identify the unit of measure of the quantity of product(s) being provided.

(9) Please identify the dollar amount of the products being provided.

To be supplemented by Standard Plans dated July, 2004

DIST	COUNTY	ROUTE	KILOMETER POST TOTAL PROJECT	SHEET No	TOTAL SHEETS
04	Son	116	12.6	1	7

INDEX OF SHEETS

SHEET No.	DESCRIPTION
1.	TITLE SHEET
2.	DRAINAGE PLAN
3.	DRAINAGE PROFILES
4.	DRAINAGE DETAILS
5	WATER POLLUTION CONTROL DETAILS
6	DRAINAGE QUANTITIES
7.	CONSTRUCTION AREA SIGNS

THE STANDARD PLANS LIST APPLICABLE TO THIS CONSTRACT IS INCLUDED IN THE NOTICE TO CONTRACTORS AND SPECIAL PROVISIONS BOOK

STATE OF CALIFORNIA

DEPARTMENT OF TRANSPORTATION

PROJECT PLANS FOR CONSTRUCTION ON

STATE HIGHWAY

IN SONOMA COUNTY
IN MONTE RIO AT ROUTE 116
AND BOHEMIAN HIGHWAY INTERSECTION

To be supplemented by Standard Plans dated July, 2004

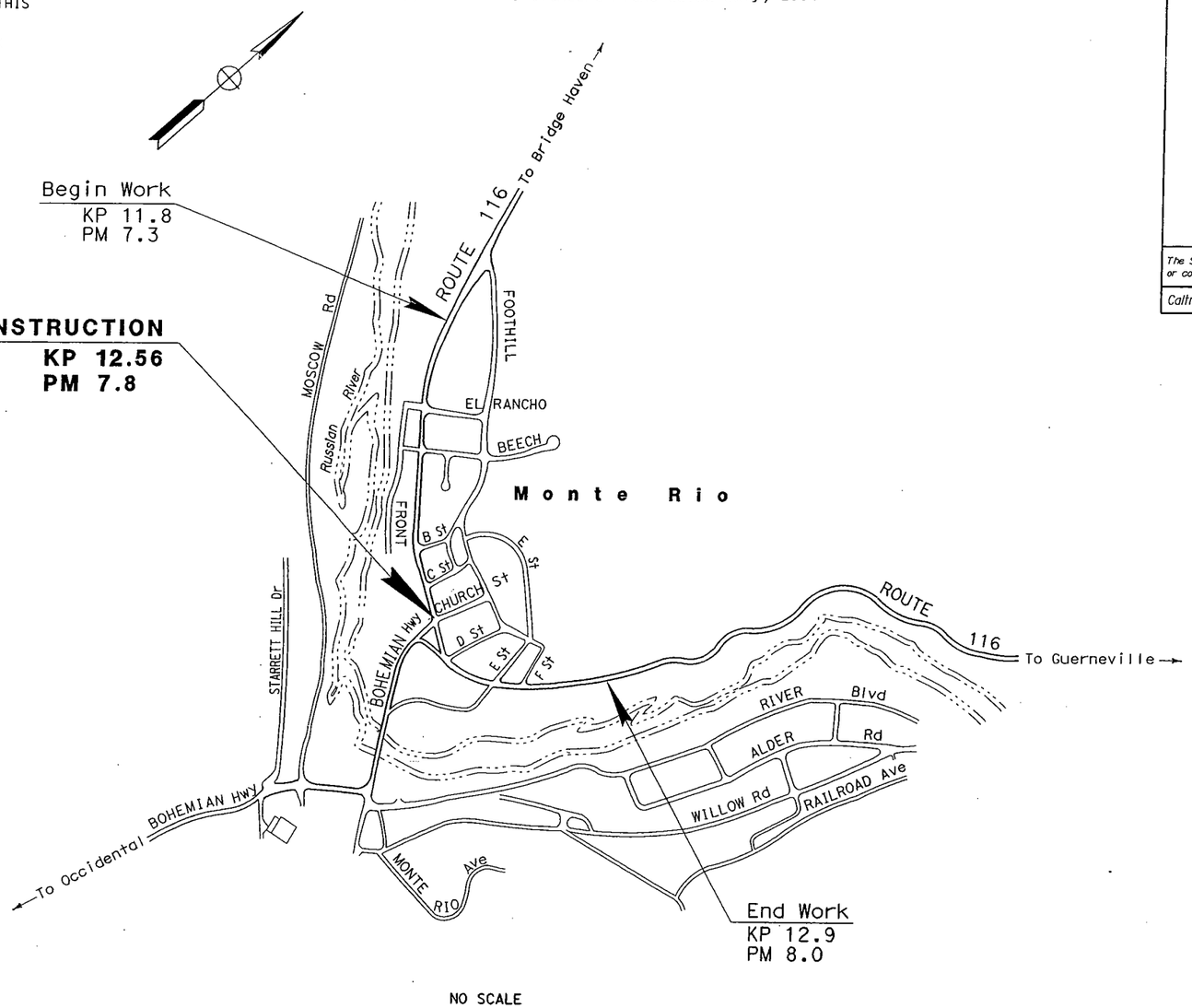

NO SCALE

The State of California or its officers or agents shall not be responsible for the accuracy or completeness of electronic copies of this plan sheet.

Caltrans now has a web site! To get to the web site, go to: http://www.dot.ca.gov

Caltrans Metric

The Contractor shall possess the Class (or classes) of license as specified in the ''Notice to Contractors''.

Project Engineer Registered Civil Engineer — Date: 6-30-07

REGISTERED PROFESSIONAL ENGINEER — N. Tran No. 56977 Exp. 6-30-07 CIVIL — STATE OF CALIFORNIA

1-16-06
Plans Approval Date

PROJECT ENGINEER	DATE	PROJECT MANAGER	DATE
A		Le Ho	

LAST REVISION 03-15-06

DATE PLOTTED => 16-MAR-2006
TIME PLOTTED => 09:37

Contract No.

$MS_JEFF

FORM DC-OE-93-PF (REV. 3/88)

RELATIVE BORDER SCALE IS IN MILLIMETERS 0 20 40 60 80

USERNAME => lmitchel
DGN FILE => 405040ab001.dgn

CU 04000

Drawing No. 050401

DIST	COUNTY	ROUTE	KILOMETER POST TOTAL PROJECT	SHEET No	TOTAL SHEETS
04	Son	116	12.6	2	7

Charlotte A. Cashin 1-16-06
REGISTERED CIVIL ENGINEER

PLANS APPROVAL DATE

REGISTERED PROFESSIONAL ENGINEER C.A. Cashin No. 34417 Exp. 9-30-07 CIVIL STATE OF CALIFORNIA

The State of California or its officers or agents shall not be responsible for the accuracy or completeness of electronic copies of this plan sheet.

Caltrans now has a web site! To get to the web site, go to: http://www.dot.ca.gov

Caltrans Metric

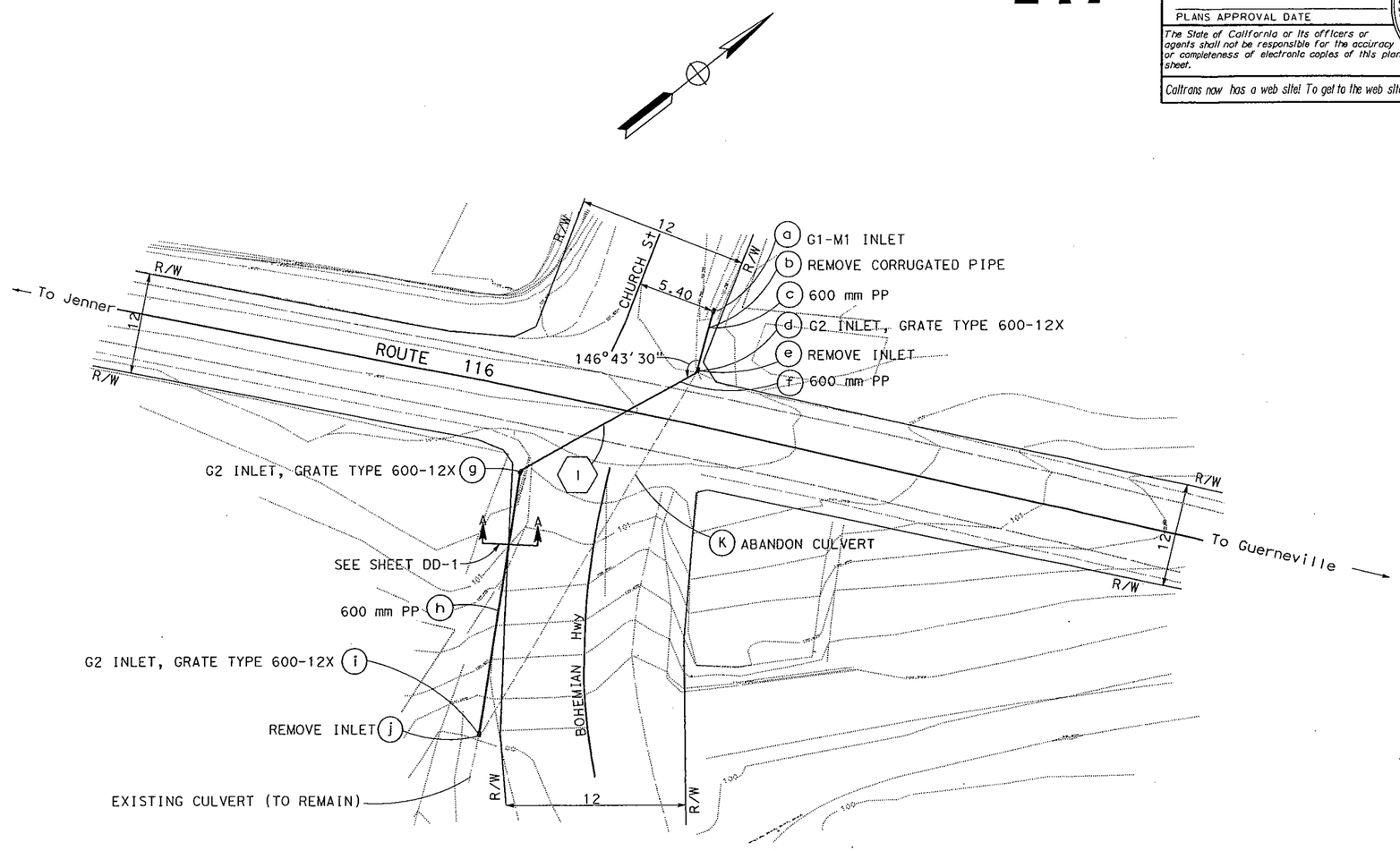

ALL DIMENSIONS ARE IN METERS UNLESS OTHERWISE SHOWN

THIS PLAN ACCURATE FOR DRAINAGE WORK ONLY

DRAINAGE PLAN

NO SCALE

D-1

STATE OF CALIFORNIA - DEPARTMENT OF TRANSPORTATION
Caltrans
HYDRAULICS

PROJECT ENGINEER

CALCULATED/DESIGNED BY
CHECKED BY

DATE | REVISED BY
DATE REVISED

LAST REVISION 04-20-06
DATE PLOTTED => 26-APR-2006
TIME PLOTTED => 09:05

RELATIVE BORDER SCALE IS IN MILLIMETERS 0 20 40 60 80

USERNAME => lmitchel
DGN FILE => 40f0401a011.dgn

CU 04609

EA 0F0401

DIST	COUNTY	ROUTE	KILOMETER POST TOTAL PROJECT	SHEET No	TOTAL SHEETS
04	Son	116	12.6	3	7

Caltrans Metric

REGISTERED CIVIL ENGINEER 1-16-06

PLANS APPROVAL DATE

REGISTERED PROFESSIONAL ENGINEER N. Tran No. 56977 Exp. 6-30-07 CIVIL STATE OF CALIFORNIA

The State of California or its officers or agents shall not be responsible for the accuracy or completeness of electronic copies of this plan sheet.

Caltrans now has a web site! To get to the web site, go to: http://www.dot.ca.gov

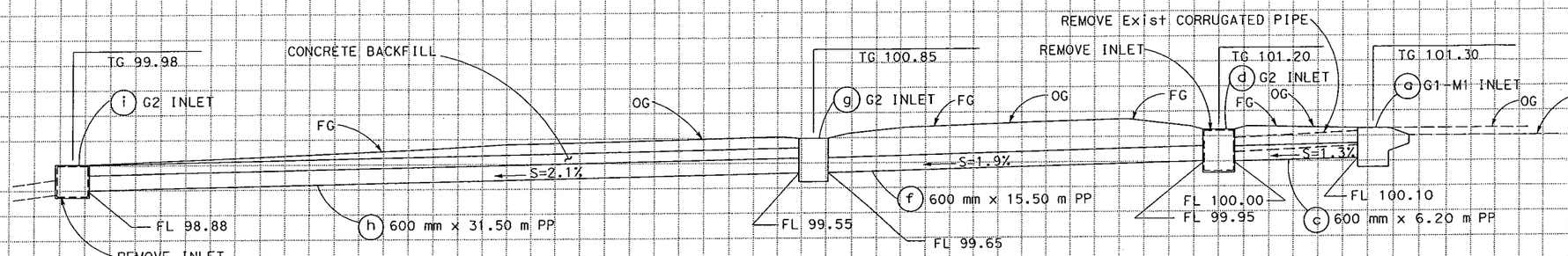

DRAINAGE SYSTEM No. 1

ALL DIMENSIONS ARE IN METERS UNLESS OTHERWISE SHOWN

DRAINAGE PROFILES

SCALE: HORIZ 1:200
VERT 1:100

DP-1

Station	
m^3 Exc	
m^3 Emb	

STATE OF CALIFORNIA - DEPARTMENT OF TRANSPORTATION

Caltrans PROJECT DEVELOPMENT

PROJECT ENGINEER

CALCULATED/DESIGNED BY

CHECKED BY

DATE REVISED BY

DATE REVISED

LAST REVISION 04-26-06

DATE PLOTTED => 26-APR-2006
TIME PLOTTED => 09:07

RELATIVE BORDER SCALE IS IN MILLIMETERS 0 20 40 60 80

USERNAME => lmitchel
DGN FILE => 40f040ib001.dgn

CU 04609

EA 0F0401

DIST	COUNTY	ROUTE	KILOMETER POST TOTAL PROJECT	SHEET No	TOTAL SHEETS
04	SON	116	12.6	4	7

Charlotte A. Cashin 1-16-06
REGISTERED CIVIL ENGINEER

PLANS APPROVAL DATE

REGISTERED PROFESSIONAL ENGINEER C.A. Cashin No. 34417 Exp. 9-30-07 CIVIL STATE OF CALIFORNIA

The State of California or its officers or agents shall not be responsible for the accuracy or completeness of electronic copies of this plan sheet.

Caltrans now has a web site! To get to the web site, go to: http://www.dot.ca.gov

Caltrans Metric

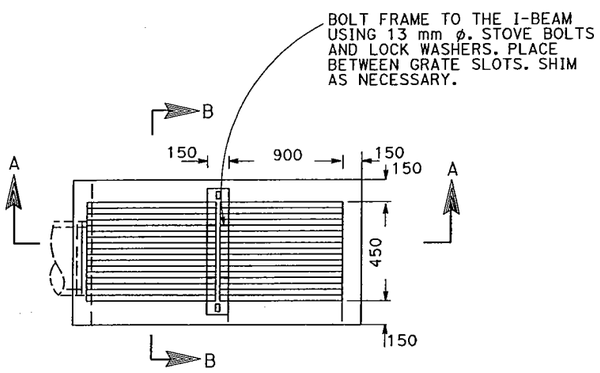

TYPE G1-M1
PLAN

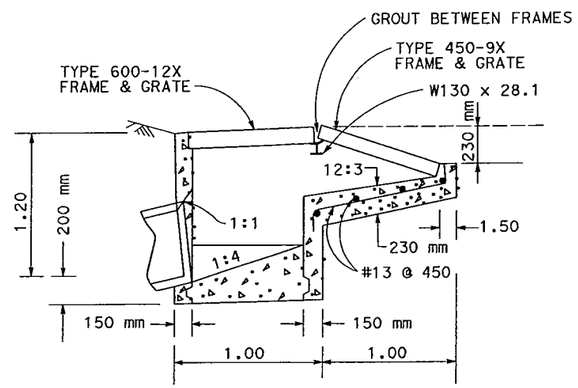

SECTION A-A

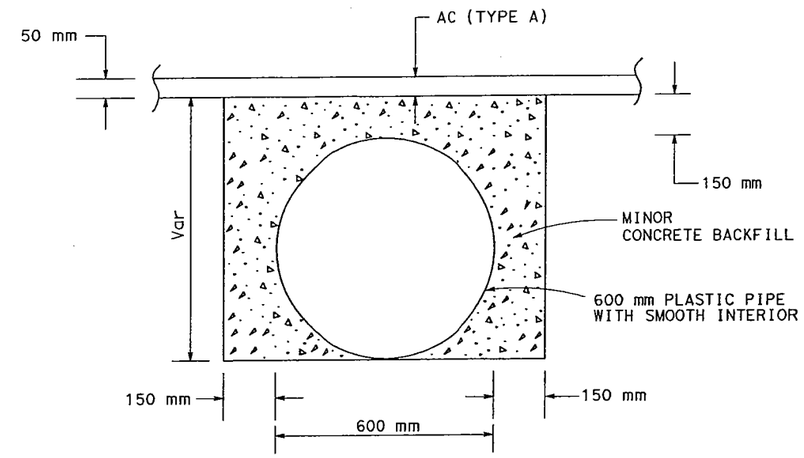

MINOR CONCRETE BACKFILL

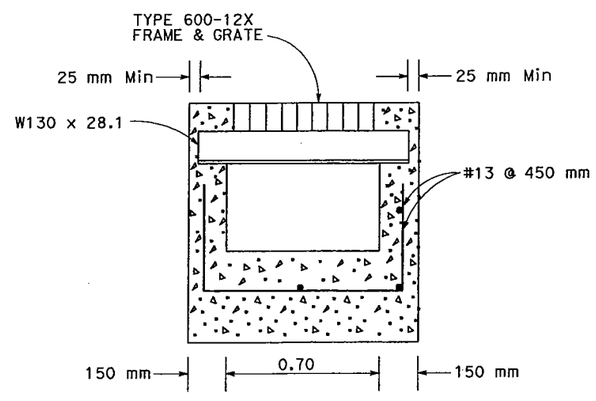

SECTION B-B

NOTE

FOR DETAILS NOT SHOWN SEE STD PLANS D73, D77A & D77B.

ALL DIMENSIONS ARE IN METERS UNLESS OTHERWISE SHOWN

DRAINAGE DETAILS

NO SCALE

DD-1

DATE	REVISED BY	DATE REVISED

CALCULATED/DESIGNED BY

CHECKED BY

PROJECT ENGINEER

STATE OF CALIFORNIA - DEPARTMENT OF TRANSPORTATION

Caltrans

LAST REVISION 04-20-06 DATE PLOTTED => 20-APR-2006 TIME PLOTTED => 13:21

RELATIVE BORDER SCALE 0 20 40 60 80

DIST	COUNTY	ROUTE	KILOMETER POST TOTAL PROJECT	SHEET No	TOTAL SHEETS
04	SON	116	12.6	5	7

Caltrans Metric

REGISTERED CIVIL ENGINEER 1-16-06

PLANS APPROVAL DATE

REGISTERED PROFESSIONAL ENGINEER N. Tran No. 56977 Exp. 6-30-07 CIVIL STATE OF CALIFORNIA

The State of California or its officers or agents shall not be responsible for the accuracy or completeness of electronic copies of this plan sheet.

Caltrans now has a web site! To get to the web site, go to: http://www.dot.ca.gov

DRAINAGE QUANTITIES

DRAINAGE SYSTEM No.	DRAINAGE UNIT	ABANDON CULVERT	REMOVE INLET	MINOR CONCRETE MINOR STRUCTURE	CONCRETE BACKFILL	REMOVE CORRUGATED PIPE	600 mm PLASTIC PIPE SMOOTH INTERIOR	Misc IRON AND STEEL	MAXIMUM COVER [N]	PIPE JOINT CLASSIFICATION [N]	HEIGHT OF INLET [N]	AC PAVEMENT (TYPE A)	DESCRIPTION
		EA		m^3	m^3	m	m	kg	m		m	Ton	
1	a			1.84				193			1.20		G1-M1 INLET
	b					6.20							REMOVE CORRUGATED PIPE
	c						6.20		0.60	S			600 mm PP
	d			1.10				108			1.20		G2 INLET, GRATE TYPE 600-12X
	e		1										REMOVE INLET
	f						15.50		1.09			1.3	600 mm PP
	g			1.10				108		S	1.20		G2 INLET, GRATE TYPE 600-12X
	h				27		31.50		0.75			5.7	600 mm PP
	i			0.97				108		S	1.00		G2 INLET, GRATE TYPE 600-12X
	j		1										REMOVE INLET
	k	1											ABANDON CULVERT
TOTAL		1	2	5.01	27	6.20	53.20	517				7.0	

[N] NOT A SEPERATE PAY ITEM, FOR INFORMATION ONLY

S - STANDARD JOINT

DRAINAGE QUANTITIES

NO SCALE

D-2

DATE	REVISED BY	DATE REVISED

CALCULATED/DESIGNED BY

CHECKED BY

PROJECT ENGINEER

STATE OF CALIFORNIA - DEPARTMENT OF TRANSPORTATION

Caltrans

LAST REVISION 04-20-06

DATE PLOTTED => 20-APR-2006
TIME PLOTTED => 13:22

RELATIVE BORDER SCALE 0 20 40 60 80

DIST	COUNTY	ROUTE	KILOMETER POST TOTAL PROJECT	SHEET No	TOTAL SHEETS
04	SON	116	12.6	6	7

REGISTERED CIVIL ENGINEER 1-18-06

PLANS APPROVAL DATE

REGISTERED PROFESSIONAL ENGINEER A.A. Ochoa No. 55279 Exp. 12-31-06 CIVIL STATE OF CALIFORNIA

The State of California or its officers or agents shall not be responsible for the accuracy or completeness of electronic copies of this plan sheet.

Caltrans now has a web site! To get to the web site, go to: http://www.dot.ca.gov

Caltrans Metric

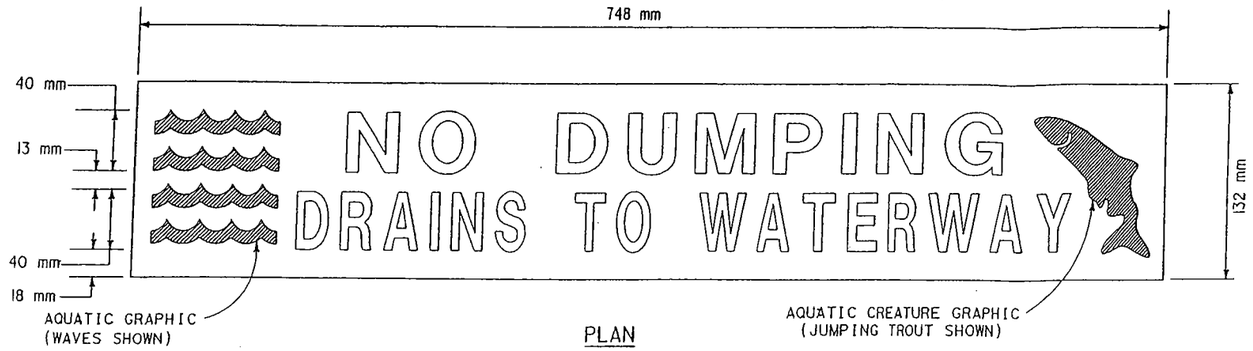

PLAN
DRAINAGE INLET MARKER
(PREFABRICATED THERMOPLASTIC)

NOTES

1. THE DIMENSIONS OF THE DRAINAGE INLET MARKER (PREFABRICATED THERMOPLASTIC) SHALL VARY NO MORE THAN 25 mm IN WIDTH AND LENGTH.
2. THE DRAINAGE INLET MARKER SHALL BE CENTERED ON THE DRAINAGE FACILITY.
3. THE LEGENDS AND GRAPHIC SHALL BE OF CONTRASTING COLORS WITH THE BACKGROUND FOR THE PREFABRICATED THERMOPLASTIC AND PLASTIC DRAINAGE INLET MARKERS.
4. USE ONLY ONE DRAINAGE INLET MARKER PER DRAINAGE FACILITY.

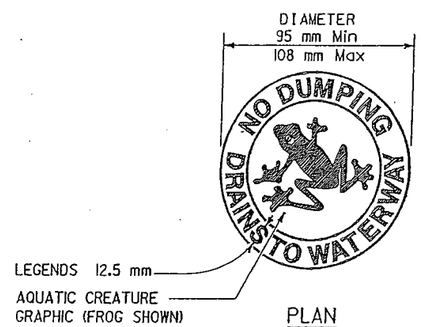

PLAN
DRAINAGE INLET MARKER
(PLASTIC)

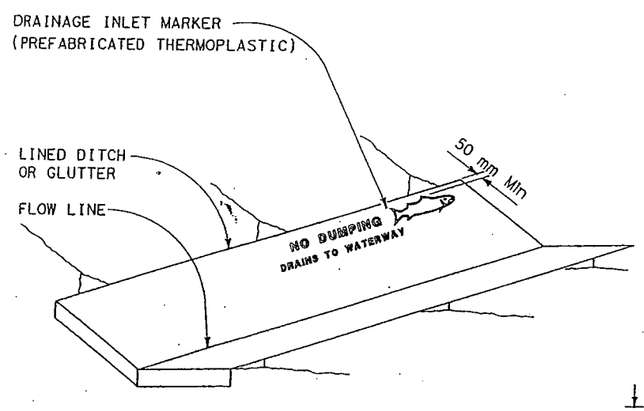

PERSPECTIVE
DRAINAGE INLET MARKER
ON LINED DITCH

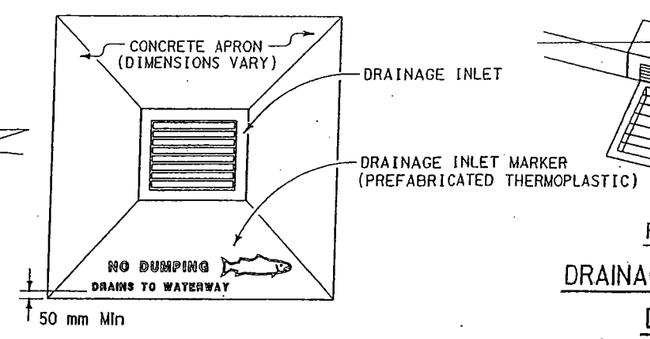

PLAN
DRAINAGE INLET MARKER ON
DRAINAGE INLET APRON

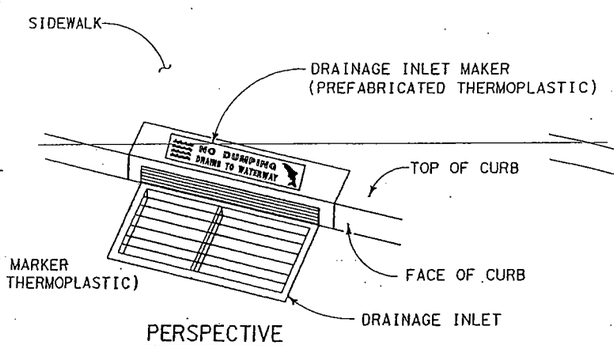

PERSPECTIVE
DRAINAGE INLET MARKER ON
DRAINAGE INLET

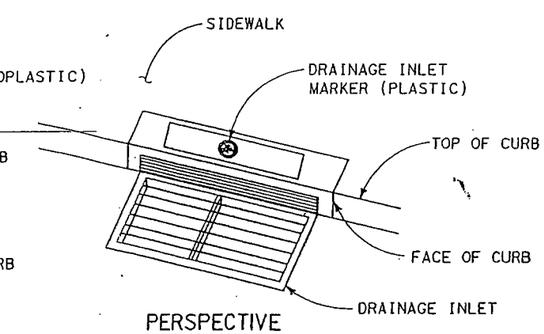

PERSPECTIVE
DRAINAGE INLET MARKER (PLASTIC)
ON DRAINAGE INLET

WATER POLLUTION CONTROL DETAILS (DRAINAGE INLET MARKER)

NO SCALE

ALL DIMENSIONS ARE IN MILLIMETERS UNLESS OTHERWISE SHOWN

WPC-1

STATE OF CALIFORNIA - DEPARTMENT OF TRANSPORTATION

Caltrans

PROJECT ENGINEER

CALCULATED/DESIGNED BY

CHECKED BY

REVISED BY

DATE REVISED

DATE

LAST REVISION 01-20-06

DATE PLOTTED => 15-MAR-2006
TIME PLOTTED => 18:21

DIST	COUNTY	ROUTE	KILOMETER POST TOTAL PROJECT	SHEET No	TOTAL SHEETS
04	Son	116	12.6	7	7

REGISTERED CIVIL ENGINEER 03-16-06

PLANS APPROVAL DATE

REGISTERED PROFESSIONAL ENGINEER J.L. Struven No. 49964 Exp. 12-31-06 CIVIL STATE OF CALIFORNIA

The State of California or its officers or agents shall not be responsible for the accuracy or completeness of electronic copies of this plan sheet.

Caltrans now has a web site! To get to the web site, go to: http://www.dot.ca.gov

Caltrans Metric

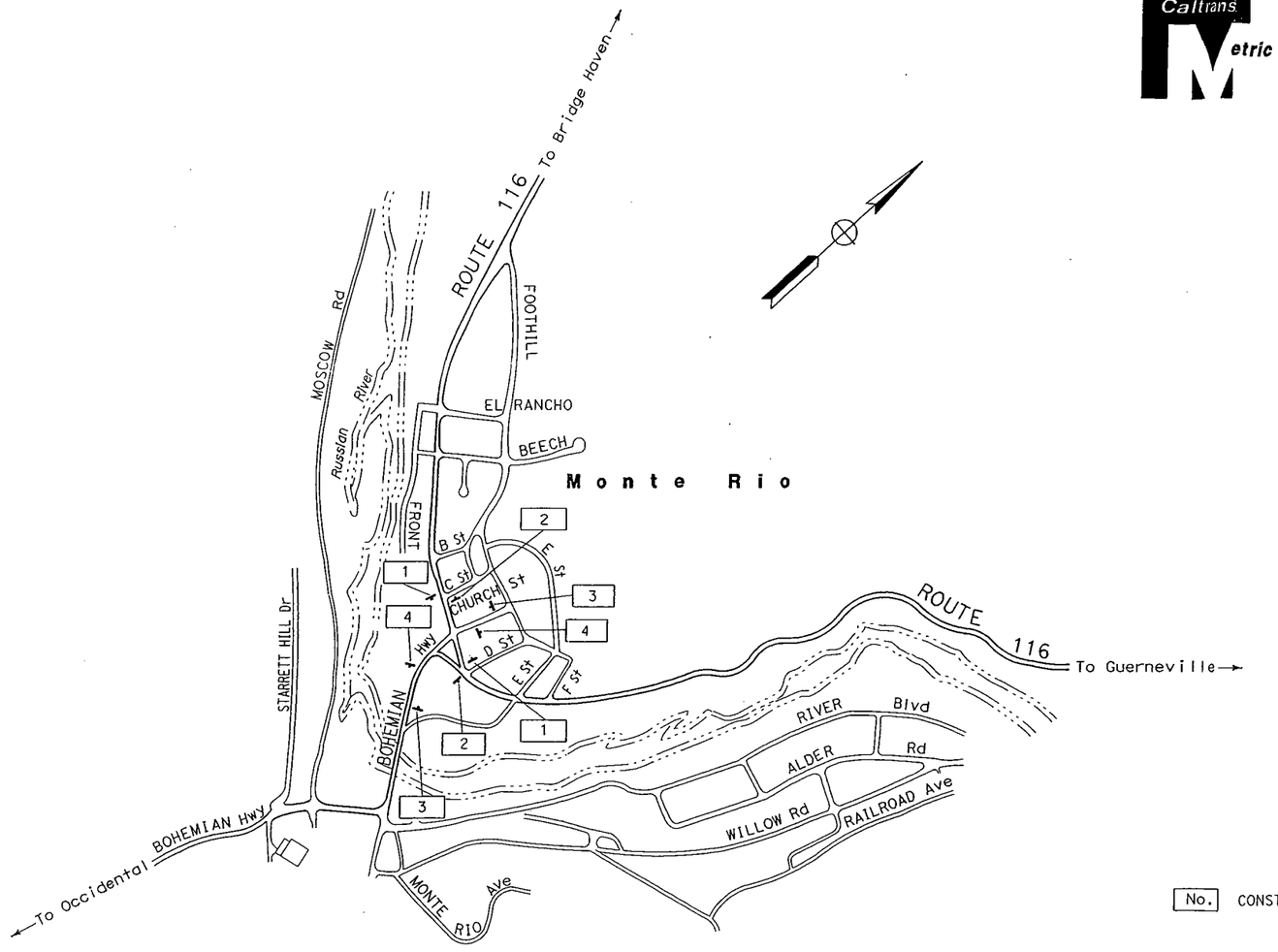

LEGEND

[No.] CONSTRUCTION AREA SIGN NUMBER

NOTES

1. EXACT LOCATIONS OF CONSTRUCTION AREA SIGNS TO BE DETERMINED BY THE ENGINEER.
2. CONSTRUCTION AREA SIGNS TO BE STATIONARY MOUNTED UNLESS OTHERWISE NOTED.

CONSTRUCTION AREA SIGNS

SIGN No.	CA CODE	MUTCD CODE	MESSAGE	PANEL SIZE (mm x mm)	No. OF POSTS & SIZE (EA-mm x mm)	QUANTITY EA	REMARKS
1	C23	G20-1	ROAD WORK AHEAD	1200 x 1200	1-89 x 140	2	
2	C14	G20-2	END ROAD WORK	1200 x 600	1-89 x 89	2	
3	C23	G20-1	ROAD WORK AHEAD	900 x 900	1-89 x 89	2	
4	C14	G20-2	END ROAD WORK	900 x 450	1-89 x 89	2	

ALL DIMENSIONS ARE IN METERS UNLESS OTHERWISE SHOWN

CONSTRUCTION AREA SIGNS

NO SCALE

THIS PLAN ACCURATE FOR CONSTRUCTION AREA SIGN WORK ONLY

CS-1

DATE	REVISED BY	DATE REVISED

CALCULATED/DESIGNED BY

CHECKED BY

PROJECT ENGINEER JERILYN L. STRUVEN

STATE OF CALIFORNIA - DEPARTMENT OF TRANSPORTATION

Caltrans TRAFFIC

LAST REVISION 03-15-06 DATE PLOTTED => 17-MAR-2006 TIME PLOTTED => 14:49

RELATIVE BORDER SCALE IS IN MILLIMETERS 0 20 40 60 80

USERNAME => lmitchel DGN FILE => 40f0401a0001.dgn

CU 04609 EA 0F0401