The following is the Table of Contents for the Internet Bid Package documents:

04a2212a	Internet Table of Contents-1 Page IFB Notice-2 Pages Checklist-1 Page Proposed Form of Contract-2 Pages
04a2212b	Specifications- **119** pages total. **(includes Admendments to the July 1999 Standard Specifications pgs 6-75)**
04a2212c	DVBE Bidder Information-3 Pages
04a2212d	Small Business Preference-1 Page Proposal Requirements-1 Page California Company Preference-1 Page Bonds-3 Pages Payee Data Record-2 Pages Recycle Content Certification-2 Pages

The Internet Bid Package contains (4) four Plans for this project. These may be obtained by contacting the Division of Procurement and Contracts at (916) 227-6075 or by faxing your request to (916) 227-1950. Please indicate that you are requesting **Bid package with plans** for Contract Number 04A2212.

If this Bid Package is downloaded via the Internet or you are using your own envelope, you will need to submit your signed bid documents in a sealed envelope with the following information on the envelope as provided in the sample below:

YOUR RETURN ADDRESS

Contract No. 04A2212
Bid Due Date: **November 18, 2004**
Bid Due Time: 2:15 PM
Bid Opening: 2:30 PM
Attn: Hae-Yung West

Department of Transportation MS 67
Division of Procurement and Contracts
1727 30th Street
Sacramento, CA 95816-7006

DEPARTMENT OF TRANSPORTATION
ADMINISTRATIVE SERVICE CENTER
Division of Procurement & Contracts MS-67
1727 30th Street
Sacramento, CA 95816 -7006
PHONE (916) 227-6000
FAX (916) 227-6155
INTERNET http://caltrans-opac.ca.gov

INVITATION FOR BID

Contract No. 04A2212
Bid Due Date: November 18, 2004

The Department of Transportation has issued the enclosed Invitation for Bid for services described in the enclosed Notice to Bidders.

Please read the entire contract package and all attachments carefully. If you desire to bid, complete the Bid Proposal and return the original in the envelope provided. Your signature affixed to and dated on the bid proposal shall constitute a certification under penalty of perjury, unless exempted, that you have complied with the nondiscrimination program requirements of Government Code Section 12990 and Title 2, California Code of Regulations, Section 8103, and the nondiscrimination program requirements of Title VI of the Civil Rights Act of 1964, 49 CFR Part 21, and 23 CFR Part 200 for Federally funded projects.

Any business used to meet DBE requirements must be certified by the Caltrans Business Enterprise Program; any business used to meet DVBE requirements must be certified by the Department of General Services, Office of Small Business Certification and Resources. Award of this contract will be to the lowest responsible bidder whose proposal complies with all requirements as described in this Invitation for Bid.

Bid Bonds are required at the time of bid opening equal to 10% of the bid amount. If the Contract amount is more than $5,000.00, **Payment** and **Performance Bonds** are required when the contract is awarded. Bids may be rejected if they are not properly completed or show any alteration of the form, additions not called for, conditional bids, incomplete bids, erasures, or irregularities of any kind.

Small Business Preference will be granted in accordance with Section 14835, et seq. of the California Government Code and as contained in Title 2, California Administrative Code, Section 1896, et set., as indicated on Form STD 811 in this Invitation for Bid.

Sealed bids must be received no later than **2:15 PM** on **November 18, 2004,** at the following location:

Department of Transportation
Procurement and Contracts MS-67
1727 30th Street
Sacramento, CA 95816-7006

LATE BIDS WILL NOT BE ACCEPTED

BIDS WILL BE OPENED AT 2:30 PM.

If your bid is **HAND DELIVERED**, you must date and time-stamp it immediately upon arrival. The date/time stamp machine is located in the lobby of the first floor to the right of the security guard station at the address noted above. After date/time stamping, bids should be placed in the locked bid cabinet located below the time stamp. If the bid package is too large to be electronically stamped, date/time stamp label provided and attach it to the bid package. When the bid package is too large for the locked bid cabinet, ask the security guard to call the Contracts' reception desk, (916) 227-6000, to have your bid package picked up by Contracts' staff.

NOTIFICATION OF RIGHT TO PROTEST

Bidders have the right to protest the award of Department of Transportation contracts subject to the following grounds, processes and procedures.

1. Grounds for Filing a Protest

   The right to protest the proposed award of a contract is afforded any bidder who claims he/she should have been awarded the contract because he/she was the lowest responsible bidder meeting the specifications.

2. Protest Process

   A protest can be filed only after the issuance of the applicable contract award notices as specified below and prior to actual award:

   a. At least five working days before awarding the contract, the Department will notify the lowest bidder that the contract is to be awarded to another bidder. The notification must be by telegram, fax, overnight courier, or personal delivery.

   b. On written request from any bidder, the Department must post a public "Notice of Intent to Award" the contract.

   c. Information technology (electronic data processing/telecommunications) protests must be filed no later than five (5) working days after the issuance of an intent to award.

3. Filing a Protest

   Submit a detailed written statement of protest, including IFB number, to the Office(s) listed below:

Department of Transportation
Office of Procurement & Contracts
Attention: A. C. Lichtman, Protest and Dispute Officer
1727 - 30th Street, MS 67
Sacramento, CA 95816
Phone # 916-227-6084
Fax # 916-227-6155

DEPARTMENT OF TRANSPORTATION
ADMINISTRATIVE SERVICE CENTER
Division of Procurement & Contracts MS-67
1727 30th Street
Sacramento, CA 95816-7006
PHONE (916) 227-6000
FAX (916) 227-6155
INTERNET http://caltrans-opac.ca.gov

GENERAL BIDDERS INSTRUCTIONS/CHECKLIST

Contract No. 04A2212

Items **CHECKED** below must be completed and returned with your bid proposal. Bids omitting this information will be regarded as nonresponsive and rejected.

__X__ Bid Proposal. Complete and sign **Contract Sheets 118, and 119** and return in the enclosed envelope.

__X__ Form DC-OE-MB10, "CALTRANS BIDDER - DVBE - INFORMATION". Please complete and sign the formsincluded in the Invitation for Bid. They **MUST** be returned with the Bid Proposal.

__X__ Bidder's Bond, Form ADM-2010, or Cash, Cashiers Check, or Certified Check made payable to CALTRANS in an amount equal to at least 10% of the amount bid.

__X__ Small Business Preference and Certification Request, Form STD-811
(Use only if claiming small business preference.)

__X__ Proposal Requirements (Form ADM-0378)

__X__ California Company Preference (Form ADM-2052).

The following forms and information will be required at the time of contract award and signature.

__X__ Payment Bond (Form ADM-2009) and Performance Bond (Form ADM-2008).

__X__ Payee Data Record, (Form STD 204).

__X__ Certificate of Insurance from Your Insurance Company

__X__ Form ADM-2038, "RECYCLE CONTENT CERTIFICATION FORM" .

PAYEE DATA RECORD

This form is designed to allow vendors to self-report information needed for accurate and complete reporting of vendor payment income. Completion of this form is required by all vendors providing goods and/or service to the State of California. **CONTRACTS WILL NOT BE EXECUTED WITHOUT THIS DOCUMENT.**

STATE OF CALIFORNIA

STANDARD AGREEMENT

STD 213 (Rev 09/01)

AGREEMENT NUMBER
04A2212

1. This Agreement is entered into between the State Agency and the Contractor named below:

STATE AGENCY'S NAME

Department of Transportation

CONTRACTOR'S NAME

.

2 The term of this Agreement is: **750 working days**

3. The maximum amount of this Agreement is: **$**

The provisions on the reverse side of hereof constitute a part of this agreement.

PROPOSED FORM OF CONTRACT
SAMPLE ONLY – DO NOT COMPLETE

IN WITNESS WHEREOF, this Agreement has been executed by the parties hereto.

CONTRACTOR		***California Department of General Services Use Onlv***
CONTRACTOR'S NAME *(if other than an individual, state whether a corporation, partnership, etc.)*		
BY *(Authorized Signature)*	DATE SIGNED*(Do not type)*	
PRINTED NAME AND TITLE OF PERSON SIGNING		
ADDRESS		
STATE OF CALIFORNIA		
AGENCY NAME DEPARTMENT OF TRANSPORTATION (CALTRANS)		
BY *(Authorized Signature)*	DATE SIGNED*(Do not type)*	Exempt PCC 10107
PRINTED NAME AND TITLE OF PERSON SIGNING C Michele Newmarch, Contract Officer		
ADDRESS Division of Procurement and Contracts, MS-67 1727 30th Street, Sacramento, CA, 95816		

1. The Contractor agrees to indemnify, defend and save harmless the State, its officers, agents, and employees from any and all claims and losses accruing or resulting to any and all contractors, subcontractors, materialmen, laborers and any other person, firm or corporation furnishing or supplying work services, materials or supplies in connection with the performance of this contract, and from any and all claims and losses accruing or resulting to any person, firm or corporation who may be injured or damaged by the Contractor in the performance of this contract.

2. The Contractor, and the agents and employees of Contractor, in the performance of the agreement, shall act in an independent capacity and not as officers or employees or agents of State of California.

3. The State may terminate this agreement and be relieved of the payment of any consideration to Contractor should Contractor fail to perform the covenants herein contained at the time and in the manner herein provided. In the event of such termination the State may proceed with the work in any manner deemed proper by the State. The cost to the State shall be deducted from any sum due the Contractor under this agreement, and the balance, if any, shall be paid the Contractor upon demand.

4. Without the written consent of the State, this agreement is not assignable by Contractor either in whole or in part.

5. Time is of the essence in this agreement.

6. No alteration or variation of the terms of this contract shall be valid unless made in writing and signed by the parties hereto, and no oral understanding or agreement not incorporated herein, shall be binding on any of the parties hereto.

7. The consideration to be paid Contractor, as provided herein, shall be in compensation for all of Contractor's expenses incurred in the performance hereof, including travel and per diem, unless otherwise expressly so provided.

Sol-37-0.3

STATE OF CALIFORNIA
DEPARTMENT OF TRANSPORTATION
DISTRICT 04

EA 04-1L5701

NOTICE TO CONTRACTORS AND SPECIAL PROVISIONS

Sealed proposals will be received by the Department of Transportation, MS-67
Division of Procurement and Contracts
1727-30th St., Sacramento, CA 95816-7006

until 2:15 P.M., November 18, 2004.

Bids will be publicly opened and read at **2:30 P.M.**, for the performance of work as follows:

For Establishing Existing Planting on State Highway in Solano County at the Sonoma County line at Sonoma Creek Bridge

The foregoing is a general description of the work to be performed and the Department of Transportation does not expressly or by implication agree that the actual items or amount of work will correspond therewith.

CONTRACTOR'S LICENSE REQUIRED: Class A, C-27, or applicable specialty license will be required at time of bid opening.

Further inquiries concerning the proposed work may be directed to:
Duty Senior Transportation Engineer (Construction),
Department of Transportation, 111 Grand Avenue, Oakland, CA 94612
Telephone : (510) 286-5209. It is requested that questions be sent by FAX
to (510) 622-1805. Please include the contract number and a return fax number.

TO REQUEST BID PACKAGES: PHONE (916) 227-6075/FAX (916) 227-1950
TO REQUEST BID RESULTS: PHONE (916) 227-6000/FAX (916) 227-1950
OR ON THE INTERNET: http://caltrans-opac.ca.gov/contract.htm

Standard Specifications and Standard Plans are available through the State of California,
Department of Transportation, Publications Unit, 1900 Royal Oaks Drive, Sacramento, CA 95815
Telephone No. (916) 445-3520.

THE DEPARTMENT OF TRANSPORTATION RESERVES THE RIGHT TO REJECT ANY AND ALL BIDS.

ITEMS OF WORK

Item	Item Code	Item	Unit of Measure	Estimated Quantity
1	024152	Initial Site Inspection	LS	Lump Sum
2	204100	Establish Existing Planting	LS	Lump Sum

SPECIAL NOTICE

****

Attention is directed to **SECTION 1, "SPECIFICATIONS AND PLANS,"** of these special provisions for **Amendments To July 1999 Standard Specifications.**

Amendments to the various sections of the Standard Specifications have been consolidated into **SECTION 1** and dated to reflect the most recent revisions.

Standard special provision SECTION 1-0.20 on pages 6 to 75 in this bid package reflects the Amendments to the July 1999 Standard Specifications Book.

STATE OF CALIFORNIA
DEPARTMENT OF TRANSPORTATION
SPECIAL PROVISIONS

SECTION 1. SPECIFICATIONS AND PLANS

SECTION 1-0.20 AMENDMENTS TO JULY 1999 STANDARD SPECIFICATIONS

AMENDMENTS TO JULY 1999 STANDARD SPECIFICATIONS

UPDATED March 25, 2004

Amendments to the Standard Specifications set forth in these special provisions shall be considered as part of the Standard Specifications for the purposes set forth in Section 5-1.04, "Coordination and Interpretation of Plans, Standard Specifications and Special Provisions," of the Standard Specifications. Whenever either the term "Standard Specifications is amended" or the term "Standard Specifications are amended" is used in the special provisions, the text or table following the term shall be considered an amendment to the Standard Specifications. In case of conflict between such amendments and the Standard Specifications, the amendments shall take precedence over and be used in lieu of the conflicting portions.

SECTION 2: PROPOSAL REQUIREMENTS AND CONDITIONS

Issue Date: June 19, 2003

Section 2-1.03, "Examination of Plans, Specifications, Contract, and Site of Work," of the Standard Specifications is amended to read:

2-1.03 Examination of Plans, Specifications, Contract, and Site of Work

- The bidder shall examine carefully the site of the work contemplated, the plans and specifications, and the proposal and contract forms therefor. The submission of a bid shall be conclusive evidence that the bidder has investigated and is satisfied as to the general and local conditions to be encountered, as to the character, quality and scope of work to be performed, the quantities of materials to be furnished and as to the requirements of the proposal, plans, specifications and the contract.
- The submission of a bid shall also be conclusive evidence that the bidder is satisfied as to the character, quality and quantity of surface and subsurface materials or obstacles to be encountered insofar as this information was reasonably ascertainable from an inspection of the site and the records of exploratory work done by the Department as shown in the bid documents, as well as from the plans and specifications made a part of the contract.
- Where the Department has made investigations of site conditions including subsurface conditions in areas where work is to be performed under the contract, or in other areas, some of which may constitute possible local material sources, bidders or contractors may, upon written request, inspect the records of the Department as to those investigations subject to and upon the conditions hereinafter set forth.
- Where there has been prior construction by the Department or other public agencies within the project limits, records of the prior construction that are currently in the possession of the Department and which have

been used by, or are known to, the designers and administrators of the project will be made available for inspection by bidders or contractors, upon written request, subject to the conditions hereinafter set forth. The records may include, but are not limited to, as-built drawings, design calculations, foundation and site studies, project reports and other data assembled in connection with the investigation, design, construction and maintenance of the prior projects.

- Inspection of the records of investigations and project records may be made at the office of the district in which the work is situated, or in the case of records of investigations related to structure work, at the Transportation Laboratory in Sacramento, California.
- When a log of test borings or other record of geotechnical data obtained by the Department's investigation of surface and subsurface conditions is included with the contract plans, it is furnished for the bidders' or Contractor's information and its use shall be subject to the conditions and limitations set forth in this Section 2-1.03.
- In some instances, information considered by the Department to be of possible interest to bidders or contractors has been compiled as "Materials Information." The use of the "Materials Information" shall be subject to the conditions and limitations set forth in this Section 2-1.03 and Section 6-2, "Local Materials."
- When cross sections are not included with the plans, but are available, bidders or contractors may inspect the cross sections and obtain copies for their use, at their expense.
- When cross sections are included with the contract plans, it is expressly understood and agreed that the cross sections do not constitute part of the contract, do not necessarily represent actual site conditions or show location, character, dimensions and details of work to be performed, and are included in the plans only for the convenience of bidders and their use is subject to the conditions and limitations set forth in this Section 2-1.03.
- When contour maps were used in the design of the project, the bidders may inspect those maps, and if available, they may obtain copies for their use.
- The availability or use of information described in this Section 2-1.03 is not to be construed in any way as a waiver of the provisions of the first paragraph in this Section 2-1.03 and bidders and contractors are cautioned to make independent investigations and examinations as they deem necessary to be satisfied as to conditions to be encountered in the performance of the work and, with respect to possible local material sources, the quality and quantity of material available from the property and the type and extent of processing that may be required in order to produce material conforming to the requirements of the specifications.
- The Department assumes no responsibility for conclusions or interpretations made by a bidder or contractor based on the information or data made available by the Department. The Department does not assume responsibility for representation made by its officers or agents before the execution of the contract concerning surface or subsurface conditions, unless that representation is expressly stated in the contract.
- No conclusions or interpretations made by a bidder or contractor from the information and data made available by the Department will relieve a bidder or contractor from properly fulfilling the terms of the contract.

SECTION 5: CONTROL OF WORK

Issue Date: December 31, 2001

Section 5-1.02A, "Trench Excavation Safety Plans," of the Standard Specifications is amended to read:

5-1.02A Excavation Safety Plans

- The Construction Safety Orders of the Division of Occupational Safety and Health shall apply to all excavations. For all excavations 1.5 m or more in depth, the Contractor shall submit to the Engineer a detailed plan showing the design and details of the protective systems to be provided for worker protection from the hazard of caving ground during excavation. The detailed plan shall include any tabulated data and any design

calculations used in the preparation of the plan. Excavation shall not begin until the detailed plan has been reviewed and approved by the Engineer.

- Detailed plans of protective systems for which the Construction Safety Orders require design by a registered professional engineer shall be prepared and signed by an engineer who is registered as a Civil Engineer in the State of California, and shall include the soil classification, soil properties, soil design calculations that demonstrate adequate stability of the protective system, and any other design calculations used in the preparation of the plan.
- No plan shall allow the use of a protective system less effective than that required by the Construction Safety Orders.
- If the detailed plan includes designs of protective systems developed only from the allowable configurations and slopes, or Appendices, contained in the Construction Safety Orders, the plan shall be submitted at least 5 days before the Contractor intends to begin excavation. If the detailed plan includes designs of protective systems developed from tabulated data, or designs for which design by a registered professional engineer is required, the plan shall be submitted at least 3 weeks before the Contractor intends to begin excavation.
- Attention is directed to Section 7-1.01E, "Trench Safety."

SECTION 9: MEASUREMENT AND PAYMENT

Issue Date: February 10, 2004

Section 9-1.04, "Notice of Potential Claim," of the Standard Specifications is amended to read:

9-1.04 NOTICE OF POTENTIAL CLAIM

- It is the intention of this section that disputes between the parties arising under and by virtue of the contract be brought to the attention of the Engineer at the earliest possible time in order that the matters may be resolved, if possible, or other appropriate action promptly taken.
- Disputes will not be considered unless the Contractor has first complied with specified notice or protest requirements, including Section 4-1.03, "Changes," Section 5-1.116, "Differing Site Conditions," Section 8-1.06, "Time of Completion," Section 8-1.07, "Liquidated Damages," and Section 8-1.10, "Utility and Non-Highway Facilities."
- For disputes arising under and by virtue of the contract, including an act or failure to act by the Engineer, the Contractor shall provide a signed written initial notice of potential claim to the Engineer within 5 days from the date the dispute first arose. The initial notice of potential claim shall provide the nature and circumstances involved in the dispute which shall remain consistent through the dispute. The initial notice of potential claim shall be submitted on Form CEM-6201A furnished by the Department and shall be certified with reference to the California False Claims Act, Government Code Sections 12650-12655. The Contractor shall assign an exclusive identification number for each dispute, determined by chronological sequencing, based on the date of the dispute.
- The exclusive identification number for each dispute shall be used on the following corresponding documents:

A. Initial notice of potential claim.
B. Supplemental notice of potential claim.
C. Full and final documentation of potential claim.
D. Corresponding claim included in the Contractor's written statement of claims.

- The Contractor shall provide the Engineer the opportunity to examine the site of work within 5 days from the date of the initial notice of potential claim. The Contractor shall proceed with the performance of contract work unless otherwise specified or directed by the Engineer.
- Throughout the disputed work, the Contractor shall maintain records that provide a clear distinction between the incurred direct costs of disputed work and that of undisputed work. The Contractor shall allow the Engineer access to the Contractor's project records deemed necessary by the Engineer to evaluate the potential claim within 20 days of the date of the Engineer's written request.
- Within 15 days of submitting the initial notice of potential claim, the Contractor shall provide a signed supplemental notice of potential claim to the Engineer that provides the following information:

A. The complete nature and circumstances of the dispute which caused the potential claim.
B. The contract provisions that provide the basis of claim.
C. The estimated cost of the potential claim, including an itemized breakdown of individual costs and how the estimate was determined.
D. A time impact analysis of the project schedule that illustrates the effect on the scheduled completion date due to schedule changes or disruptions where a request for adjustment of contract time is made.

- The information provided in items A and B above shall provide the Contractor's complete reasoning for additional compensation or adjustments.
- The supplemental notice of potential claim shall be submitted on Form CEM-6201B furnished by the Department and shall be certified with reference to the California False Claims Act, Government Code Sections 12650-12655. The Engineer will evaluate the information presented in the supplemental notice of potential claim and provide a written response to the Contractor within 20 days of its receipt. If the estimated cost or effect on the scheduled completion date changes, the Contractor shall update information in items C and D above as soon as the change is recognized and submit this information to the Engineer.
- Within 30 days of the completion of work related to the potential claim, the Contractor shall provide the full and final documentation of potential claim to the Engineer that provides the following information:

A. A detailed factual narration of events fully describing the nature and circumstances that caused the dispute, including, but not limited to, necessary dates, locations, and items of work affected by the dispute.
B. The specific provisions of the contract that support the potential claim and a statement of the reasons these provisions support and provide a basis for entitlement of the potential claim.
C. When additional monetary compensation is requested, the exact amount requested calculated in conformance with Section 9-1.03, "Force Account Payment," or Section 8-1.09, "Right of Way Delays," including an itemized breakdown of individual costs. These costs shall be segregated into the following cost categories:

    1. Labor – A listing of individuals, classifications, regular hours and overtime hours worked, dates worked, and other pertinent information related to the requested reimbursement of labor costs.
    2. Materials – Invoices, purchase orders, location of materials either stored or incorporated into the work, dates materials were transported to the project or incorporated into the work, and other pertinent information related to the requested reimbursement of material costs.
    3. Equipment – Listing of detailed description (make, model, and serial number), hours of use, dates of use and equipment rates. Equipment rates shall be at the applicable State rental rate as listed in the Department of Transportation publication entitled "Labor Surcharge and Equipment Rental Rates," in effect when the affected work related to the dispute was performed.

4. Other categories as specified by the Contractor or the Engineer.

D. When an adjustment of contract time is requested the following information shall be provided:

1. The specific dates for which contract time is being requested.
2. The specific reasons for entitlement to a contract time adjustment.
3. The specific provisions of the contract that provide the basis for the requested contract time adjustment.
4. A detailed time impact analysis of the project schedule. The time impact analysis shall show the effect of changes or disruptions on the scheduled completion date to demonstrate entitlement to a contract time adjustment.

E. The identification and copies of the Contractor's documents and the substance of oral communications that support the potential claim.

- The full and final documentation of the potential claim shall be submitted on Form CEM-6201C furnished by the Department and shall be certified with reference to the California False Claims Act, Government Code Sections 12650-12655.
- Pertinent information, references, arguments, and data to support the potential claim shall be included in the full and final documentation of potential claim. Information submitted subsequent to the full and final documentation submittal will not be considered. Information required in the full and final documentation of potential claim, as listed in items A to E above, that is not applicable to the dispute may be exempted as determined by the Engineer. No full and final documentation of potential claim will be considered that does not have the same nature and circumstances, and basis of claim as those specified on the initial and supplemental notices of potential claim.
- The Engineer will evaluate the information presented in the full and final documentation of potential claim and provide a written response to the Contractor within 30 days of its receipt unless otherwise specified. The Engineer's receipt of the full and final documentation of potential claim shall be evidenced by postal receipt or the Engineer's written receipt if delivered by hand. If the full and final documentation of potential claim is submitted by the Contractor after acceptance of the work by the Director, the Engineer need not provide a written response.
- Provisions in this section shall not apply to those claims for overhead costs and administrative disputes that occur after issuance of the proposed final estimate. Administrative disputes are disputes of administrative deductions or retentions, contract item quantities, contract item adjustments, interest payments, protests of contract change orders as provided in Section 4-1.03A, "Procedure and Protest," and protests of the weekly statement of working days as provided in Section 8-1.06, "Time of Completion." Administrative disputes that occur prior to issuance of the proposed final estimate shall follow applicable requirements of this section. Information listed in the supplemental notice and full and final documentation of potential claim that is not applicable to the administrative dispute may be exempted as determined by the Engineer.
- Unless otherwise specified in the special provisions, the Contractor may pursue the administrative claim process pursuant to Section 9-1.07B, "Final Payment and Claims," for any potential claim found by the Engineer to be without merit.
- Failure of the Contractor to conform to specified dispute procedures shall constitute a failure to pursue diligently and exhaust the administrative procedures in the contract, and is deemed as the Contractor's waiver of the potential claim and a waiver of the right to a corresponding claim for the disputed work in the administrative claim process in conformance with Section 9-1.07B, "Final Payment of Claims," and shall operate as a bar to arbitration pursuant to Section 10240.2 of the California Public Contract Code.

Section 9-1.07B, "Final Payment and Claims," of the Standard Specifications is amended to read:

9-1.07B Final Payment and Claims

- After acceptance by the Director, the Engineer will make a proposed final estimate in writing of the total amount payable to the Contractor, including an itemization of the total amount, segregated by contract item quantities, extra work and other bases for payment, and shall also show each deduction made or to be made for prior payments and amounts to be kept or retained under the provisions of the contract. Prior estimates and payments shall be subject to correction in the proposed final estimate. The Contractor shall submit written approval of the proposed final estimate or a written statement of claims arising under or by virtue of the contract so that the Engineer receives the written approval or statement of claims no later than close of business of the thirtieth day after receiving the proposed final estimate. If the thirtieth day falls on a Saturday, Sunday or legal holiday, then receipt of the written approval or statement of claims by the Engineer shall not be later than close of business of the next business day. The Contractor's receipt of the proposed final estimate shall be evidenced by postal receipt. The Engineer's receipt of the Contractor's written approval or statement of claims shall be evidenced by postal receipt or the Engineer's written receipt if delivered by hand.
- On the Contractor's approval, or if the Contractor files no claim within the specified period of 30 days, the Engineer will issue a final estimate in writing in conformance with the proposed final estimate submitted to the Contractor, and within 30 days thereafter the State will pay the entire sum so found to be due. That final estimate and payment thereon shall be conclusive and binding against both parties to the contract on all questions relating to the amount of work done and the compensation payable therefor, except as otherwise provided in Sections 9-1.03C, "Records," and 9-1.09, "Clerical Errors."
- If the Contractor within the specified period of 30 days files claims, the Engineer will issue a semifinal estimate in conformance with the proposed final estimate submitted to the Contractor and within 30 days thereafter the State will pay the sum found to be due. The semifinal estimate and corresponding payment shall be conclusive and binding against both parties to the contract on each question relating to the amount of work done and the compensation payable therefor, except insofar as affected by the claims filed within the time and in the manner required hereunder and except as otherwise provided in Sections 9-1.03C, "Records," and 9-1.09, "Clerical Errors."
- Except for claims for overhead costs and administrative disputes that occur after issuance of the proposed final estimate, the Contractor shall only provide the following two items of information for each claim:

A. The exclusive identification number that corresponds to the supporting full and final documentation of potential claim.
B. The final amount of requested additional compensation.

- If the final amount of requested additional compensation is different than the amount of requested compensation included in the full and final documentation of potential claim, the Contractor shall provide in the written statement of claims the reasons for the changed amount, the specific provisions of the contract which support the changed amount, and a statement of the reasons the provisions support and provide a basis for the changed amount. If the Contractor's claim fails to provide an exclusive identification number or if there is a disparity in the provided exclusive identification number, the Engineer will notify the Contractor of the omission or disparity. The Contractor shall have 15 days after receiving notification from the Engineer to correct the omission or disparity. If after the 15 days has elapsed, there is still an omission or disparity of the exclusive identification number assigned to the claim, the Engineer will assign the number. No claim will be considered that has any of the following deficiencies:

A. The claim does not have the same nature, circumstances, and basis as the corresponding full and final documentation of potential claim.
B. The claim does not have a corresponding full and final documentation of potential claim.
C. The claim was not included in the written statement of claims.
D. The Contractor did not comply with applicable notice or protest requirements of Sections 4-1.03, "Changes," 5-1.116, "Differing Site Condition," 8-1.06, "Time of Completion," 8-1.07, "Liquidated Damages," 8-1.10, "Utility and Non-Highway Facilities," and 9-1.04, "Notice of Potential Claim."

- Administrative disputes that occur after issuance of the proposed final estimate shall be included in the Contractor's written statement of claims in sufficient detail to enable the Engineer to ascertain the basis and amounts of those claims.
- The Contractor shall keep full and complete records of the costs and additional time incurred for work for which a claim for additional compensation is made. The Engineer or designated claim investigators or auditors shall have access to those records and any other records as may be required by the Engineer to determine the facts or contentions involved in the claims. Failure to permit access to those records shall be sufficient cause for denying the claims.
- The written statement of claims submitted by the Contractor shall be accompanied by a notarized certificate containing the following language:

Under the penalty of law for perjury or falsification and with specific reference to the California False Claims Act, Government Code Section 12650 et. seq., the undersigned,

_____ .
(name)

_____ *of*
(title)

_____ .
(company)

hereby certifies that the claim for the additional compensation and time, if any, made herein for the work on this contract is a true statement of the actual costs incurred and time sought, and is fully documented and supported under the contract between parties.

Dated _____

/s/ _____

Subscribed and sworn before me this _____ day

of _____ .

_____
(Notary Public)
My Commission
Expires _____

- Failure to submit the notarized certificate will be sufficient cause for denying the claim.
- Claims for overhead type expenses or costs, in addition to being certified as stated above, shall be supported and accompanied by an audit report of an independent Certified Public Accountant. Omission of a supporting audit report of an independent Certified Public Accountant shall result in denial of the claim and shall operate as a bar to arbitration, as to the claim, in conformance with the requirements in Section 10240.2 of the California Public Contract Code. Claims for overhead type expenses or costs shall be subject to audit by the

State at its discretion. The costs of performing an audit examination and submitting the report shall be borne by the Contractor. The Certified Public Accountant's audit examination shall be performed in conformance with the requirements of the American Institute of Certified Public Accountants Attestation Standards. The audit examination and report shall depict the Contractor's project and company-wide financial records and shall specify the actual overall average daily rates for both field and home office overhead for the entire duration of the project, and whether the costs have been properly allocated. The rates of field and home office overhead shall exclude unallowable costs as determined in Title 48 of the Federal Acquisition Regulations, Chapter 1, Part 31. The audit examination and report shall determine if the rates of field and home office overhead are:

A. Allowable in conformance with the requirements in Title 48 of the Federal Acquisition Regulations, Chapter 1, Part 31.
B. Adequately supported by reliable documentation.
C. Related solely to the project under examination.

- Costs or expenses incurred by the State in reviewing or auditing claims that are not supported by the Contractor's cost accounting or other records shall be deemed to be damages incurred by the State within the meaning of the California False Claims Act.
- If the Contractor files a timely written statement of claims in response to the proposed final estimate, the District that administers the contract will submit a claim position letter to the Contractor by hand delivery or deposit in the U.S. mail within 135 days of acceptance of the contract. The claim position letter will delineate the District's position on the Contractor's claims. If the Contractor disagrees with the claim position letter, the Contractor shall submit a written notification of its disagreement and a written request to meet with the board of review, to be received by the District not later than 15 days after the Contractor's receipt of the claim position letter. The written notification of disagreement shall set forth the basis for the Contractor's disagreement and be submitted to the office designated in the claim position letter. The Contractor's failure to provide a timely written notification of disagreement or timely written request to meet with the board of review shall constitute the Contractor's acceptance and agreement with the determinations provided in the claim position letter and with final payment pursuant to the claim position letter.
- If the Contractor files a timely notification of disagreement with the District claim position letter and a timely request to meet with the board of review, then the board of review, designated by the District Director to review claims that remain in dispute, will meet with the Contractor within 45 days after receipt by the District of the notification of disagreement.
- If the District fails to submit a claim position letter to the Contractor within 135 days after the acceptance of the contract and the Contractor has claims that remain in dispute, the Contractor may request a meeting with the board of review designated by the District Director to review claims that remain in dispute. The Contractor's request for a meeting shall identify the claims that remain in dispute. If the Contractor files a request for a meeting, the board of review will meet with the Contractor within 45 days after the District receives the request for the meeting.
- Attendance by the Contractor at the board of review meeting shall be mandatory. The board of review will review those claims and make a written recommendation thereon to the District Director. The final determination of claims, made by the District Director, will be sent to the Contractor by hand delivery or deposit in the U.S. mail. The Engineer will then make and issue the Engineer's final estimate in writing and within 30 days thereafter the State will pay the entire sum, if any, found due thereon. That final estimate shall be conclusive and binding against both parties to the contract on all questions relating to the amount of work done and the compensation payable therefor, except as otherwise provided in Sections 9-1.03C, "Records," and 9-1.09, "Clerical Errors."

• Failure of the Contractor to conform to the specified dispute procedures shall constitute a failure to pursue diligently and exhaust the administrative procedures in the contract and shall operate as a bar to arbitration in conformance with the requirements in Section 10240.2 of the California Public Contract Code.

SECTION 19: EARTHWORK

Issue Date: December 31, 2001

The third paragraph of Section 19-1.02, "Preservation of Property," of the Standard Specifications is amended to read:

• In addition to the provisions in Sections 5-1.02, "Plans and Working Drawings," and 5-1.02A, "Excavation Safety Plans," detailed plans of the protective systems for excavations on or affecting railroad property will be reviewed for adequacy of protection provided for railroad facilities, property, and traffic. These plans shall be submitted at least 9 weeks before the Contractor intends to begin excavation requiring the protective systems. Approval by the Engineer of the detailed plans for the protective systems will be contingent upon the plans being satisfactory to the railroad company involved.

SECTION 42: GROOVE AND GRIND PAVEMENT

Issue Date: December 31, 2001

The last sentence of the first subparagraph of the third paragraph in Section 42-2.02, "Construction," of the Standard Specifications is amended to read:

• After grinding has been completed, the pavement shall conform to the straightedge and profile requirements specified in Section 40-1.10, "Final Finishing."

SECTION 49: PILING

Issue Date: March 25, 2004

The first paragraph in Section 49-1.03, "Determination of Length," of the Standard Specifications is amended to read:

• Foundation piles of any material shall be of such length as is required to develop the nominal resistance, to obtain the specified penetration, and to extend into the cap or footing block as shown on the plans, or specified in the special provisions.

The fourth paragraph in Section 49-1.03, "Determination of Length," of the Standard Specifications is amended to read:

• Modification to the specified installation methods and specified pile tip elevation will not be considered at locations where tension or lateral load demands control design pile tip elevations or when the plans state that specified pile tip elevation shall not be revised.

The sixth and seventh paragraphs in Section 49-1.03, "Determination of Length," of the Standard Specifications are amended to read:

- Indicator compression pile load testing shall conform to the requirements in ASTM Designation: D 1143. The pile shall sustain the first compression test load applied which is equal to the nominal resistance in compression, as shown on the plans, with no more than 13 mm total vertical movement at the top of the pile measured relative to the top of the pile prior to the start of compression load testing.
- Indicator tension pile load testing shall conform to the requirements in ASTM Designation: D 3689. The loading apparatus described as "Load Applied to Pile by Hydraulic Jack(s) Acting at One End of Test Beam(s) Anchored to the Pile" shall not be used. The pile shall sustain the first tension test load applied which is equal to the nominal resistance in tension, as shown on the plans, with no more than 13 mm total vertical movement at the top of the pile measured relative to the top of the pile prior to the start of tension load testing.

The ninth paragraph in Section 49-1.03, "Determination of Length," of the Standard Specifications is amended to read:

- For driven piling, the Contractor shall furnish piling of sufficient length to obtain both the specified tip elevation and nominal resistance shown on the plans or specified in the special provisions. For cast-in-drilled-hole concrete piling, the Contractor shall construct piling of such length to develop the nominal resistance in compression and to obtain the specified tip elevation shown on the plans or specified in the special provisions.

The tenth paragraph in Section 49-1.03, "Determination of Length," of the Standard Specifications is deleted.

The fourth paragraph in Section 49-1.04, "Load Test Piles," of the Standard Specifications is amended to read:

- Load test piles and anchor piles which are not to be incorporated in the completed structure shall be removed in conformance with the provisions in Section 15-4.02, "Removal Methods," and the remaining holes shall be backfilled with earth or other suitable material approved by the Engineer.

The first paragraph in Section 49-1.05, "Driving Equipment," of the Standard Specifications is amended to read:

- Driven piles shall be installed with impact hammers that are approved in writing by the Engineer. Impact hammers shall be steam, hydraulic, air or diesel hammers. Impact hammers shall develop sufficient energy to drive the piles at a penetration rate of not less than 3 mm per blow at the specified nominal resistance.

The seventh paragraph in Section 49-1.05, "Driving Equipment," of the Standard Specifications is amended to read:

- When necessary to obtain the specified penetration and when authorized by the Engineer, the Contractor may supply and operate one or more water jets and pumps, or furnish the necessary drilling apparatus and drill holes not greater than the least dimension of the pile to the proper depth and drive the piles therein. Jets shall not be used at locations where the stability of embankments or other improvements would be endangered. In addition, for steel piles, steel shells, or steel casings, when necessary to obtain the specified penetration or to

prevent damage to the pile during installation, the Contractor shall provide special driving tips or heavier pile sections or take other measures as approved by the Engineer.

• The use of followers or underwater hammers for driving piles will be permitted if authorized in writing by the Engineer. When a follower or underwater hammer is used, its efficiency shall be verified by furnishing the first pile in each bent or footing sufficiently long and driving the pile without the use of a follower or underwater hammer.

The second paragraph in Section 49-1.07, "Driving," of the Standard Specifications is amended to read:

• Timber piles shall be fresh-headed and square and when permitted by the Engineer, the heads of the piles may be protected by means of heavy steel or wrought iron rings. During driving operations timber piling shall be restrained from lateral movement at intervals not to exceed 6 m over the length between the driving head and the ground surface. During driving operations, the timber pile shall be kept moving by continuous operation of the hammer. When the blow count exceeds either 2 times the blow count required in 300 mm, or 3 times the blow count required in 75 mm for the nominal resistance as shown on the plans, computed in conformance with the provisions in Section 49-1.08, "Pile Driving Acceptance Criteria," additional aids shall be used to obtain the specified penetration. These aids may include the use of water jets or drilling, where permitted, or the use of a larger hammer employing a heavy ram striking with a low velocity.

Section 49-1.08, "Bearing Value and Penetration," of the Standard Specifications is amended to read:

49-1.08 PILE DRIVING ACCEPTANCE CRITERIA

• Except for piles to be load tested, driven piles shall be driven to a value of not less than the nominal resistance shown on the plans unless otherwise specified in the special provisions or permitted in writing by the Engineer. In addition, when a pile tip elevation is specified, driven piles shall penetrate at least to the specified tip elevation, unless otherwise permitted in writing by the Engineer. Piles to be load tested shall be driven to the specified tip elevation.

• When the pile nominal resistance is omitted from the plans or the special provisions, timber piles shall be driven to a nominal resistance of 800 kN, and steel and concrete piles shall be driven to a nominal resistance of 1250 kN.

• The nominal resistance for driven piles shall be determined from the following formula in which "R_u" is the nominal resistance in kilonewtons, "E_r" is the manufacturer's rating for joules of energy developed by the hammer at the observed field drop height, and "N" is the number of hammer blows in the last 300 millimeters. (maximum value to be used for N is 100):

$$R_u = (7 * (E_r)^{1/2} * \log_{10} (0.83 * N)) - 550$$

Section 49-3.01, "Description," of the Standard Specifications is amended by deleting the fifth paragraph.

The sixth paragraph in Section 49-3.01, "Description," of the Standard Specifications is amended to read:

• Lifting anchors used in precast prestressed concrete piles without a class designation ending in "C" (corrosion resistant) shall be removed, and the holes filled in conformance with the provisions in Section 51-1.18A, "Ordinary Surface Finish."

The first and second paragraphs in Section 49-4.01, "Description," of the Standard Specifications are amended to read:

- Cast-in-place concrete piles shall consist of one of the following:

  A. Steel shells driven permanently to the required nominal resistance and penetration and filled with concrete.
  B. Steel casings installed permanently to the required penetration and filled with concrete.
  C. Drilled holes filled with concrete.
  D. Rock sockets filled with concrete.

- The drilling of holes shall conform to the provisions in these specifications. Concrete filling for cast-in-place concrete piles is designated by compressive strength and shall have a minimum 28-day compressive strength of 25 MPa. At the option of the Contractor, the combined aggregate grading for the concrete shall be either the 25-mm maximum grading, the 12.5-mm maximum grading, or the 9.5-mm maximum grading. Concrete shall conform to the provisions in Section 90, "Portland Cement Concrete," and Section 51, "Concrete Structures." Reinforcement shall conform to the provisions in Section 52, "Reinforcement."

The fourth paragraph in Section 49-4.03, "Drilled Holes," of the Standard Specifications is amended to read:

- After placing reinforcement and prior to placing concrete in the drilled hole, if caving occurs or deteriorated foundation material accumulates on the bottom of the hole, the bottom of the drilled hole shall be cleaned. The Contractor shall verify that the bottom of the drilled hole is clean.

The first and second paragraphs in Section 49-4.04, "Steel Shells," of the Standard Specifications are amended to read:

- Steel shells shall be sufficiently watertight to exclude water during the placing of concrete. The shells may be cylindrical or tapered, step-tapered, or a combination of either, with cylindrical sections.

The first paragraph in Section 49-4.05, "Inspection," of the Standard Specifications is amended to read:

- After being driven and prior to placing reinforcement and concrete therein, the steel shells shall be examined for collapse or reduced diameter at any point. Any shell which is improperly driven or broken or shows partial collapse to such an extent as to materially decrease its nominal resistance will be rejected. Rejected shells shall be removed and replaced, or a new shell shall be driven adjacent to the rejected shell. Rejected shells which cannot be removed shall be filled with concrete by the Contractor at the Contractor's expense. When a new shell is driven to replace a rejected shell, the Contractor, at the Contractor's expense, shall enlarge the footing as determined necessary by the Engineer.

The third paragraph in Section 49-5.01, "Description," of the Standard Specifications is amended to read:

- Steel pipe piles shall conform to the following requirements:

  1. Steel pipe piles less than 360 mm in diameter shall conform to the requirements in ASTM Designation: A 252, Grade 2 or 3.

2. Steel pipe piles 360 mm and greater in diameter shall conform to the requirements in ASTM Designation: A 252, Grade 3.
3. Steel pipe piles shall be of the nominal diameter and nominal wall thickness shown on the plans or specified in the special provisions.
4. The carbon equivalency (CE) of steel for steel pipe piles, as defined in AWS D 1.1, Section XI5.1, shall not exceed 0.45.
5. The sulfur content of steel for steel pipe piles shall not exceed 0.05-percent.
6. Seams in steel pipe piles shall be complete penetration welds.

The third paragraph in Section 49-6.02, "Payment," of the Standard Specifications is amended to read:

- The contract price paid per meter for cast-in-drilled-hole concrete piling shall include full compensation for furnishing all labor, materials, tools, equipment, and incidentals, and for doing all work involved in drilling holes, disposing of material resulting from drilling holes, temporarily casing holes and removing water when necessary, furnishing and placing concrete and reinforcement, and constructing reinforced concrete extensions, complete in place, to the required penetration, as shown on the plans, as specified in these specifications and in the special provisions, and as directed by the Engineer.

The seventh paragraph in Section 49-6.02, "Payment," of the Standard Specifications is amended to read

- The contract unit price paid for drive pile shall include full compensation for furnishing all labor, materials, tools, equipment, and incidentals, and for doing all the work involved in driving timber, concrete and steel piles, driving steel shells for cast-in-place concrete piles, placing filling materials for cast-in-place concrete piles and cutting off piles, all complete in place to the required nominal resistance and penetration as shown on the plans and as specified in these specifications and the special provisions, and as directed by the Engineer.

The ninth paragraph in Section 49-6.02, "Payment," of the Standard Specifications is amended to read:

- Full compensation for all jetting, drilling, providing special driving tips or heavier sections for steel piles or shells, or other work necessary to obtain the specified penetration and nominal resistance of the piles, for predrilling holes through embankment and filling the space remaining around the pile with sand or pea gravel, for disposing of material resulting from jetting, drilling or predrilling holes, and for all excavation and backfill involved in constructing concrete extensions as shown on the plans, and as specified in these specifications and the special provisions, and as directed by the Engineer shall be considered as included in the contract unit price paid for drive pile or in the contract price paid per meter for cast-in-drilled-hole concrete piling, and no additional compensation will be allowed therefor.

Section 49-6.02, "Payment," of the Standard Specifications is amended by adding the following paragraphs:

Full compensation for furnishing and placing additional testing reinforcement, for load test anchorages, and for cutting off test piles, shall be considered as included in the contract price paid for piling of the type or class shown in the Engineer's Estimate, and no additional compensation will be allowed.

No additional compensation or extension of time will be made for additional foundation investigation, installation and testing of indicator piling, cutting off piling and restoring the foundation investigation and indicator pile sites, and review of request by the Engineer

SECTION 50: PRESTRESSING CONCRETE

Issue Date: November 18, 2002

Section 50-1.02, "Drawings," of the Standard Specifications is amended by adding the following paragraph after the second paragraph:

- Each working drawing submittal shall consist of plans for a single bridge or portion thereof. For multi-frame bridges, each frame shall require a separate working drawing submittal.

Section 50-1.05, "Prestressing Steel," of the Standard Specifications is amended to read:

- Prestressing steel shall be high-tensile wire conforming to the requirements in ASTM Designation: A 421, including Supplement I; high-tensile seven-wire strand conforming to the requirements in ASTM Designation: A 416; or uncoated high-strength steel bars conforming to the requirements in ASTM Designation: A 722, including all supplementary requirements. The maximum mass requirement of ASTM Designation: A 722 will not apply.
- In addition to the requirements of ASTM Designation: A 722, for deformed bars, the reduction of area shall be determined from a bar from which the deformations have been removed. The bar shall be machined no more than necessary to remove the deformations over a length of 300 mm, and reduction will be based on the area of the machined portion.
- In addition to the requirements specified herein, epoxy-coated seven-wire prestressing steel strand shall be grit impregnated and filled in conformance with the requirements in ASTM Designation: A 882/A 882M, including Supplement I, and the following:

A. The coating material shall be on the Department's list of approved coating materials for epoxy-coated strand, available from the Transportation Laboratory.
B. The film thickness of the coating after curing shall be 381 µm to 1143 µm.
C. Prior to coating the strand, the Contractor shall furnish to the Transportation Laboratory a representative 230-g sample from each batch of epoxy coating material to be used. Each sample shall be packaged in an airtight container identified with the manufacturer's name and batch number.
D. Prior to use of the epoxy-coated strand in the work, written certifications referenced in ASTM Designation: A 882/A 882M, including a representative load-elongation curve for each size and grade of strand to be used and a copy of the quality control tests performed by the manufacturer, shall be furnished to the Engineer.
E. In addition to the requirements in Section 50-1.10, "Samples for Testing," four 1.5-m long samples of coated strand and one 1.5-m long sample of uncoated strand of each size and reel shall be furnished to the Engineer for testing. These samples, as selected by the Engineer, shall be representative of the material to be used in the work.
F. Epoxy-coated strand shall be cut using an abrasive saw.
G. All visible damage to coatings caused by shipping and handling, or during installation, including cut ends, shall be repaired in conformance with the requirements in ASTM Designation: A 882/A 882M. The patching material shall be furnished by the manufacturer of the epoxy powder and shall be applied in conformance with the manufacturer's written recommendations. The patching material shall be compatible with the original epoxy coating material and shall be inert in concrete.

- All bars in any individual member shall be of the same grade, unless otherwise permitted by the Engineer.
- When bars are to be extended by the use of couplers, the assembled units shall have a tensile strength of not less than the manufacturer's minimum guaranteed ultimate tensile strength of the bars. Failure of any one sample to meet this requirement will be cause for rejection of the heat of bars and lot of couplers. The location of couplers in the member shall be subject to approval by the Engineer.
- Wires shall be straightened if necessary to produce equal stress in all wires or wire groups or parallel lay cables that are to be stressed simultaneously or when necessary to ensure proper positioning in the ducts.
- Where wires are to be button-headed, the buttons shall be cold formed symmetrically about the axes of the wires. The buttons shall develop the minimum guaranteed ultimate tensile strength of the wire. No cold forming process shall be used that causes indentations in the wire. Buttonheads shall not contain wide open splits, more than 2 splits per head, or splits not parallel with the axis of the wire.
- Prestressing steel shall be protected against physical damage and rust or other results of corrosion at all times from manufacture to grouting or encasing in concrete. Prestressing steel that has sustained physical damage at any time shall be rejected. The development of visible rust or other results of corrosion shall be cause for rejection, when ordered by the Engineer.
- Epoxy-coated prestressing steel strand shall be covered with an opaque polyethylene sheeting or other suitable protective material to protect the strand from exposure to sunlight, salt spray, and weather. For stacked coils, the protective covering shall be draped around the perimeter of the stack. The covering shall be adequately secured; however, it should allow for air circulation around the strand to prevent condensation under the covering. Epoxy-coated strand shall not be stored within 300 m of ocean or tidal water for more than 2 months.
- Prestressing steel shall be packaged in containers or shipping forms for the protection of the steel against physical damage and corrosion during shipping and storage. Except for epoxy-coated strand, a corrosion inhibitor which prevents rust or other results of corrosion, shall be placed in the package or form, or shall be incorporated in a corrosion inhibitor carrier type packaging material, or when permitted by the Engineer, may be applied directly to the steel. The corrosion inhibitor shall have no deleterious effect on the steel or concrete or bond strength of steel to concrete. Packaging or forms damaged from any cause shall be immediately replaced or restored to original condition.
- The shipping package or form shall be clearly marked with a statement that the package contains high-strength prestressing steel, and the type of corrosion inhibitor used, including the date packaged.
- Prestressing steel for post-tensioning which is installed in members prior to placing and curing of the concrete, and which is not epoxy-coated, shall be continuously protected against rust or other results of corrosion, until grouted, by means of a corrosion inhibitor placed in the ducts or applied to the steel in the duct. The corrosion inhibitor shall conform to the provisions specified herein.
- When steam curing is used, prestressing steel for post-tensioning shall not be installed until the steam curing is completed.
- Water used for flushing ducts shall contain either quick lime (calcium oxide) or slaked lime (calcium hydroxide) in the amount of 0.01-kg/L. Compressed air used to blow out ducts shall be oil free.
- When prestressing steel for post-tensioning is installed in the ducts after completion of concrete curing, and if stressing and grouting are completed within 10 days after the installation of the prestressing steel, rust which may form during those 10 days will not be cause for rejection of the steel. Prestressing steel installed, tensioned, and grouted in this manner, all within 10 days, will not require the use of a corrosion inhibitor in the duct following installation of the prestressing steel. Prestressing steel installed as above but not grouted within 10 days shall be subject to all the requirements in this section pertaining to corrosion protection and rejection because of rust. The requirements in this section pertaining to tensioning and grouting within 10 days shall not apply to epoxy-coated prestressing steel strand.

- Any time prestressing steel for pretensioning is placed in the stressing bed and is exposed to the elements for more than 36 hours prior to encasement in concrete, adequate measures shall be taken by the Contractor, as approved by the Engineer, to protect the steel from contamination or corrosion.
- After final fabrication of the seven-wire prestressing steel strand, no electric welding of any form shall be performed on the prestressing steel. Whenever electric welding is performed on or near members containing prestressing steel, the welding ground shall be attached directly to the steel being welded.
- Pretensioned prestressing steel shall be cut off flush with the end of the member. For epoxy-coated prestressing steel, only abrasive saws shall be used to cut the steel. The exposed ends of the prestressing steel and a 25-mm strip of adjoining concrete shall be cleaned and painted. Cleaning shall be by wire brushing or abrasive blast cleaning to remove all dirt and residue on the metal or concrete surfaces. Immediately after cleaning, the surfaces shall be covered with one application of unthinned zinc-rich primer (organic vehicle type) conforming to the provisions in Section 91, "Paint," except that 2 applications shall be applied to surfaces which will not be covered by concrete or mortar. Aerosol cans shall not be used. The paint shall be thoroughly mixed at the time of application and shall be worked into any voids in the prestressing tendons.

The thirteenth paragraph in Section 50-1.08, "Prestressing," of the Standard Specifications is amended to read:

- Prestressing steel in pretensioned members shall not be cut or released until the concrete in the member has attained a compressive strength of not less than the value shown on the plans or 28 MPa, whichever is greater. In addition to these concrete strength requirements, when epoxy-coated prestressing steel strand is used, the steel shall not be cut or released until the temperature of the concrete surrounding the strand is less than 65°C, and falling.

The fifth paragraph in Section 50-1.10, "Samples for Testing," of the Standard Specifications is amended to read:

- The following samples of materials and tendons, selected by the Engineer from the prestressing steel at the plant or jobsite, shall be furnished by the Contractor to the Engineer well in advance of anticipated use:

A. For wire or bars, one 2-m long sample and for strand, one 1.5-m long sample, of each size shall be furnished for each heat or reel.
B. For epoxy-coated strand, one 1.5-m long sample of uncoated strand of each size shall be furnished for each reel.
C. If the prestressing tendon is a bar, one 2-m long sample shall be furnished and in addition, if couplers are to be used with the bar, two 1.25-m long samples of bar, equipped with one coupler and fabricated to fit the coupler, shall be furnished.

The second paragraph in Section 50-1.11, "Payment," of the Standard Specifications is amended to read:

- The contract lump sum prices paid for prestressing cast-in-place concrete of the types listed in the Engineer's Estimate shall include full compensation for furnishing all labor, materials, tools, equipment, and incidentals, and for doing all work involved in furnishing, placing, and tensioning the prestressing steel in cast-in-place concrete structures, complete in place, as shown on the plans, as specified in these specifications and the special provisions, and as directed by the Engineer.

SECTION 51: CONCRETE STRUCTURES

Issue Date: December 23, 2003

The eleventh paragraph in Section 51-1.05, "Forms," of the Standard Specifications is amended to read:

- Form panels for exposed surfaces shall be furnished and placed in uniform widths of not less than 0.9-m and in uniform lengths of not less than 1.8 m, except at the end of continuously formed surfaces where the final panel length required is less than 1.8 m. Where the width of the member formed is less than 0.9-m, the width of the panels shall be not less than the width of the member. Panels shall be arranged in symmetrical patterns conforming to the general lines of the structure. Except when otherwise provided herein or shown on the plans, panels for vertical surfaces shall be placed with the long dimension horizontal and with horizontal joints level and continuous. Form panels for curved surfaces of columns shall be continuous for a minimum of one quarter of the circumference, or 1.8 m. For walls with sloping footings which do not abut other walls, panels may be placed with the long dimension parallel to the footing. Form panels on each side of the panel joint shall be precisely aligned, by means of supports or fasteners common to both panels, to result in a continuous unbroken concrete plane surface. When prefabricated soffit panels are used, form filler panels joining prefabricated panels shall have a uniform minimum width of 0.3-m and shall produce a smooth uniform surface with consistent longitudinal joint lines between the prefabricated panels.

The first and second paragraph in Section 51-1.06A, "Falsework Design and Drawings," of the Standard Specifications are amended to read:

- The Contractor shall submit to the Engineer working drawings and design calculations for falsework proposed for use at bridges. For bridges where the height of any portion of the falsework, as measured from the ground line to the soffit of the superstructure, exceeds 4.25 m; or where any individual falsework clear span length exceeds 4.85 m; or where provision for vehicular, pedestrian, or railroad traffic through the falsework is made; the drawings shall be signed by an engineer who is registered as a Civil Engineer in the State of California. Six sets of the working drawings and 2 copies of the design calculations shall be furnished. Additional working drawings and design calculations shall be submitted to the Engineer when specified in "Railroad Relations and Insurance" of the special provisions.
- The falsework drawings shall include details of the falsework erection and removal operations showing the methods and sequences of erection and removal and the equipment to be used. The details of the falsework erection and removal operations shall demonstrate the stability of all or any portions of the falsework during all stages of the erection and removal operations.

The seventh paragraph in Section 51-1.06A, "Falsework Design and Drawings," of the Standard Specifications is amended to read:

- In the event that several falsework plans are submitted simultaneously, or an additional plan is submitted for review before the review of a previously submitted plan has been completed, the Contractor shall designate the sequence in which the plans are to be reviewed. In such event, the time to be provided for the review of any plan in the sequence shall be not less than the review time specified above for that plan, plus 2 weeks for each plan of higher priority which is still under review. A falsework plan submittal shall consist of plans for a single bridge or portion thereof. For multi-frame bridges, each frame shall require a separate falsework plan submittal.

Section 51-1.06A, "Falsework Design and Drawings," of the Standard Specifications is amended by adding the following paragraphs:

- If structural composite lumber is proposed for use, the falsework drawings shall clearly identify the structural composite lumber members by grade (E value), species, and type. The Contractor shall provide technical data from the manufacturer showing the tabulated working stress values of the composite lumber. The Contractor shall furnish a certificate of compliance as specified in Section 6-1.07, "Certificates of Compliance," for each delivery of structural composite lumber to the project site.
- For falsework piles with a calculated loading capacity greater than 900 kN, the falsework piles shall be designed by an engineer who is registered as either a Civil Engineer or a Geotechnical Engineer in the State of California, and the calculations shall be submitted to the Engineer.

The first paragraph in Section 51-1.06A(1), "Design Loads," of the Standard Specifications is amended to read:

- The design load for falsework shall consist of the sum of dead and live vertical loads, and an assumed horizontal load. The minimum total design load for any falsework, including members that support walkways, shall be not less than 4800 N/m^2 for the combined live and dead load regardless of slab thickness.

The eighth paragraph in Section 51-1.06A(1), "Design Loads," of the Standard Specifications is amended to read:

- In addition to the minimum requirements specified in this Section 51-1.06A, falsework for box girder structures with internal falsework bracing systems using flexible members capable of withstanding tensile forces only, shall be designed to include the vertical effects caused by the elongation of the flexible member and the design horizontal load combined with the dead and live loads imposed by concrete placement for the girder stems and connected bottom slabs. Falsework comprised of individual steel towers with bracing systems using flexible members capable of withstanding tensile forces only to resist overturning, shall be exempt from these additional requirements.

The third paragraph in Section 51-1.06B, "Falsework Construction," of the Standard Specifications is amended to read:

- When falsework is supported on piles, the piles shall be driven and the actual nominal resistance assessed in conformance with the provisions in Section 49, "Piling."

Section 51-1.06B, "Falsework Construction," of the Standard Specifications is amended by adding the following paragraphs:

- For falsework piles with a calculated nominal resistance greater than 1800 kN, the Contractor shall conduct dynamic monitoring of pile driving and generate field acceptance criteria based on a wave equation analysis. These analyses shall be signed by an engineer who is registered as a Civil Engineer in the State of California and submitted to the Engineer prior to completion of falsework erection.

- Prior to the placement of falsework members above the stringers, the final bracing system for the falsework shall be installed.

Section 51-1.06C, "Removing Falsework," of the Standard Specifications is amended by adding the following paragraph:

• The falsework removal operation shall be conducted in such a manner that any portion of the falsework not yet removed remains in a stable condition at all times.

The sixth paragraph in Section 51-1.09, "Placing Concrete," of the Standard Specifications is amended to read:

• Vibrators used to consolidate concrete containing epoxy-coated bar reinforcement or epoxy-coated prestressing steel shall have a resilient covering to prevent damage to the epoxy-coating on the reinforcement or prestressing steel.

The third sentence of the fourth paragraph in Section 51-1.12D, "Sheet Packing, Preformed Pads and Board Fillers," of the Standard Specifications is amended to read:

Surfaces of expanded polystyrene against which concrete is placed shall be faced with hardboard.

The table in the ninth paragraph of Section 51-1.12H(1), "Plain and Fabric Reinforced Elastomeric Bearing Pads," of the Standard Specifications is amended to read:

Tensile strength, percent	-15
Elongation at break, percent	-40; but not less than 300% total elongation of the material
Hardness, points	+10

The first sentence of the fourth paragraph in Section 51-1.17, "Finish Bridge Decks," of the Standard Specifications is amended to read:

• The smoothness of completed roadway surfaces of structures, approach slabs and the adjacent 15 m of approach pavement, and the top surfaces of concrete decks which are to be covered with another material, will be tested by the Engineer with a bridge profilograph in conformance with the requirements in California Test 547 and the requirements herein.

Section 51-1.17, "Finishing Bridge Decks," of the Standard Specifications is amended by deleting the seventh, thirteenth and fourteenth paragraphs.

The fourteenth paragraph in Section 51-1.23, "Payment," of the Standard Specifications is amended by deleting "and injecting epoxy in cracks".

SECTION 52: REINFORCEMENT

Issue Date: March 25, 2004

The third paragraph in Section 52-1.04, "Inspection," of the Standard Specifications is amended to read:

• A Certificate of Compliance conforming to the provisions in Section 6-1.07, "Certificates of Compliance," shall also be furnished for each shipment of epoxy-coated bar reinforcement or wire

reinforcement certifying that the coated reinforcement conforms to the requirements in ASTM Designation: A 775/A 775M or A 884/A 884M, respectively, and the provisions in Section 52-1.02B, "Epoxy-coated Reinforcement." The Certificate of Compliance shall include all of the certifications specified in ASTM Designation: A 775/A 775M or A 884/A 884M respectively, and a statement that the coating material has been prequalified by acceptance testing performed by the Valley Forge Laboratories, Inc., Devon, Pennsylvania.

Section 52-1.07 "Placing," of the Standard Specifications is amended to read by deleting item C of the third paragraph.

Section 52-1.08 "Splicing," of the Standard Specifications is amended to read:

52-1.08 SPLICING

- Splices of reinforcing bars shall consist of lap splices, service splices, or ultimate butt splices.
- Splicing of reinforcing bars will not be permitted at a location designated on the plans as a "No-Splice Zone." At the option of the Contractor, reinforcing bars may be continuous at locations where splices are shown on the plans. The location of splices, except where shown on the plans, shall be determined by the Contractor using available commercial lengths where practicable.
- Unless otherwise shown on the plans, splices in adjacent reinforcing bars at any particular section shall be staggered. The minimum distance between staggered lap splices or mechanical lap splices shall be the same as the length required for a lap splice in the largest bar. The minimum distance between staggered butt splices shall be 600 mm, measured between the midpoints of the splices along a line which is centered between the axes of the adjacent bars.

52-1.08A Lap Splicing Requirements

- Splices made by lapping shall consist of placing reinforcing bars in contact and wiring them together, maintaining the alignment of the bars and the minimum clearances. Should the Contractor elect to use a butt welded or mechanical splice at a location not designated on the plans as requiring a service or ultimate butt splice, this splice shall conform to the testing requirements for service splice.
- Reinforcing bars shall not be spliced by lapping at locations where the concrete section is not sufficient to provide a minimum clear distance of 50 mm between the splice and the nearest adjacent bar. The clearance to the surface of the concrete specified in Section 52-1.07, "Placing," shall not be reduced.
- Reinforcing bars Nos. 43 and 57 shall not be spliced by lapping.
- Where ASTM Designations: A 615/A 615M, Grade 420 or A 706/A 706M reinforcing bars are required, the length of lap splices shall be as follows: Reinforcing bars No. 25 or smaller shall be lapped at least 45 diameters of the smaller bar joined; and reinforcing bars Nos. 29, 32, and 36 shall be lapped at least 60 diameters of the smaller bar joined, except when otherwise shown on the plans.
- Where ASTM Designation: A 615/A 615M, Grade 280 reinforcing bars are permitted, the length of lap splices shall be as follows: Reinforcing bars No. 25 or smaller shall be lapped at least 30 diameters of the smaller bar joined; and reinforcing bars Nos. 29, 32, and 36 shall be lapped at least 45 diameters of the smaller bar joined, except when otherwise shown on the plans.
- Splices in bundled bars shall conform to the following:

A In bundles of 2 bars, the length of the lap splice shall be the same as the length of a single bar lap splice.
B. In bundles of 3 bars, the length of the lap splice shall be 1.2 times the length of a single bar lap splice.

- Welded wire fabric shall be lapped such that the overlap between the outermost cross wires is not less than the larger of:

A. 150 mm,
B. The spacing of the cross wires plus 50 mm, or
C. The numerical value of the longitudinal wire size (MW-Size Number) times 370 divided by the spacing of the longitudinal wires in millimeters.

52-1.08B Service Splicing and Ultimate Butt Splicing Requirements

• Service splices and ultimate butt splices shall be either butt welded or mechanical splices, shall be used at the locations shown on the plans, and shall conform to the requirements of these specifications and the special provisions.

52-1.08B(1) Mechanical Splices

• Mechanical splices to be used in the work shall be on the Department's current prequalified list before use. The prequalified list can be obtained from the Department's internet site listed in the special provisions or by contacting the Transportation Laboratory directly.

• When tested in conformance with the requirements in California Test 670, the total slip of the reinforcing bars within the splice device after loading in tension to 200 MPa and relaxing to 20 MPa shall not exceed the values listed in the following table. The slip shall be measured between gage points that are clear of the splice device.

Reinforcing Bar Number	Total Slip (μm)
13	250
16	250
19	250
22	350
25	350
29	350
32	450
36	450
43	600
57	750

• Slip requirements shall not apply to mechanical lap splices, splices that are welded, or splices that are used on hoops.

• Splicing procedures shall be in conformance with the manufacturer's recommendations, except as modified in this section. Splices shall be made using the manufacturer's standard equipment, jigs, clamps, and other required accessories.

• Splice devices shall have a clear coverage of not less than 40 mm measured from the surface of the concrete to the outside of the splice device. Stirrups, ties, and other reinforcement shall be adjusted or relocated, and additional reinforcement shall be placed, if necessary, to provide the specified clear coverage to reinforcement.

• The Contractor shall furnish the following information for each shipment of splice material in conformance with the provisions in Section 6-1.07, "Certificates of Compliance:"

A. The type or series identification of the splice material including tracking information for traceability.
B. The bar grade and size number to be spliced.
C. A copy of the manufacturer's product literature giving complete data on the splice material and installation procedures.

D. A statement that the splicing systems and materials used in conformance with the manufacturer's installation procedures will develop the required tensile strengths, based on the nominal bar area, and will conform to the total slip requirements and the other requirements in these specifications.
E. A statement that the splice material conforms to the type of mechanical splice in the Department's current prequalified list.

52-1.08B(2) Butt Welded Splices

- Except for resistance butt welds, butt welded splices of reinforcing bars shall be complete joint penetration butt welds conforming to the requirements in AWS D 1.4, and these specifications.
- Welders and welding procedures shall be qualified in conformance with the requirements in AWS D 1.4.
- Only the joint details and dimensions as shown in Figure 3.2, "Direct Butt Joints," of AWS D 1.4, shall be used for making complete joint penetration butt welds of bar reinforcement. Split pipe backing shall not be used.
- Butt welds shall be made with multiple weld passes using a stringer bead without an appreciable weaving motion. The maximum stringer bead width shall be 2.5 times the diameter of the electrode and slagging shall be performed between each weld pass. Weld reinforcement shall not exceed 4 mm in convexity.
- Electrodes used for welding shall meet the minimum Charpy V-notch impact requirement of 27°J at –20°C.
- For welding of bars conforming to the requirements of ASTM Designation: A 615/A 615M, Grade 280 or Grade 420, the requirements of Table 5.2, "Minimum Preheat and Interpass Temperatures," of AWS D 1.4 are superseded by the following:

The minimum preheat and interpass temperatures shall be 200°C for Grade 280 bars and 300°C for Grade 420 bars. Immediately after completing the welding, at least 150 mm of the bar on each side of the splice shall be covered by an insulated wrapping to control the rate of cooling. The insulated wrapping shall remain in place until the bar has cooled below 90°C.

- When welding different grades of reinforcing bars, the electrode shall conform to Grade 280 bar requirements and the preheat shall conform to the Grade 420 bar requirements.
- In the event that any of the specified preheat, interpass, and post weld cooling temperatures are not met, all weld and heat affected zone metal shall be removed and the splice rewelded.
- Welding shall be protected from air currents, drafts, and precipitation to prevent loss of heat or loss of arc shielding. The method of protecting the welding area from loss of heat or loss of arc shielding shall be subject to approval by the Engineer.
- Reinforcing bars shall not be direct butt spliced by thermite welding.
- Procedures to be used in making welded splices in reinforcing bars, and welders employed to make splices in reinforcing bars, shall be qualified by tests performed by the Contractor on sample splices of the type to be used, before making splices to be used in the work.

52-1.08B(3) Resistance Butt Welds

- Shop produced resistance butt welds shall be produced by a fabricator who is approved by the Transportation Laboratory. The list of approved fabricators can be obtained from the Department’s internet site or by contacting the Transportation Laboratory directly.
- Before manufacturing hoops using resistance butt welding, the Contractor shall submit to the Engineer the manufacturer's Quality Control (QC) manual for the fabrication of hoops. As a minimum, the QC manual shall include the following:

A. The pre-production procedures for the qualification of material and equipment.
B. The methods and frequencies for performing QC procedures during production.
C. The calibration procedures and calibration frequency for all equipment.
D. The welding procedure specification (WPS) for resistance welding.
E. The method for identifying and tracking lots.

52-1.08C Service Splice and Ultimate Butt Splice Testing Requirements

- The Contractor shall designate in writing a splicing Quality Control Manager (QCM). The QCM shall be responsible directly to the Contractor for 1) the quality of all service and ultimate butt splicing including the inspection of materials and workmanship performed by the Contractor and all subcontractors; and 2) submitting, receiving, and approving all correspondence, required submittals, and reports regarding service and ultimate splicing to and from the Engineer.
- The QCM shall not be employed or compensated by any subcontractor, or by other persons or entities hired by subcontractors, who will provide other services or materials for the project. The QCM may be an employee of the Contractor.
- Testing on prequalification and production sample splices shall be performed at the Contractor's expense, at an independent qualified testing laboratory. The laboratory shall not be employed or compensated by any subcontractor, or by other persons or entities hired by subcontractors who will provide other services or materials for the project, and shall have the following:

A. Proper facilities, including a tensile testing machine capable of breaking the largest size of reinforcing bar to be tested with minimum lengths as shown in this section.
B. A device for measuring the total slip of the reinforcing bars across the splice to the nearest 25 µm, that, when placed parallel to the longitudinal axis of the bar is able to simultaneously measure movement across the splice, at 2 locations, 180 degrees apart.
C. Operators who have received formal training for performing the testing requirements of ASTM Designation: A 370 and California Test 670.
D. A record of annual calibration of testing equipment performed by an independent third party that has 1) standards that are traceable to the National Institute of Standards and Technology, and 2) a formal reporting procedure, including published test forms.

- The Contractor shall provide samples for quality assurance testing in conformance with the provisions in these specifications and the special provisions.
- Prequalification and production sample splices shall be 1) a minimum length of 1.5 meters for reinforcing bars No. 25 or smaller, and 2 meters for reinforcing bars No. 29 or larger, with the splice located at mid-point; and 2) suitably identified before shipment with weatherproof markings that do not interfere with the Engineer's tamper-proof markings or seals. Splices that shows signs of tampering will be rejected.
- Each set or sample splice, as defined herein, shall be identified as representing either a prequalification or production test sample splice.
- For the purpose of production testing, a lot of either service splices or ultimate butt splices is defined as 1) 150, or fraction thereof, of the same type of mechanical splices used for each bar size and each bar deformation pattern that is used in the work, or 2) 150, or fraction thereof, of complete joint penetration butt welded splices, or resistance butt welded splices for each bar size used in the work. If different diameters of hoop reinforcement are shown on the plans, separate lots shall be used for each different hoop diameter.
- Whenever a lot of splices is rejected, the rejected lot and subsequent lots of splices shall not be used in the work until 1) the QCM performs a complete review of the Contractor's quality control process for these splices, 2) a written report is submitted to the Engineer describing the cause of failure for the splices in this lot

and provisions for preventing similar failures in future lots, and 3) the Engineer has provided the Contractor with written notification that the report is acceptable. The Engineer shall have 3 working days after receipt of the report to provide notification to the Contractor. In the event the Engineer fails to provide notification within the time allowed, and if, in the opinion of the Engineer, completion of the work is delayed or interfered with by reason of the Engineer's delay in providing notification, the Contractor will be compensated for any resulting loss, and an extension of time will be granted in the same manner as provided for in Section 8-1.09, "Right of Way Delays."

52-1.08C(1) Splice Prequalification Report

- Before using any service splices or ultimate butt splices in the work, the Contractor shall submit a Splice Prequalification Report. The report shall include splice material information, names of the operators who will be performing the splicing, and descriptions of the positions, locations, equipment, and procedures that will be used in the work.
- The Splice Prequalification Report shall also include certifications from the fabricator for prequalifications of operators and procedures based on sample tests performed no more than 2 years before submitting the report. Each operator shall be certified by performing 2 sample splices for each bar size of each splice type that the operator will be performing in the work. For deformation-dependent types of splice devices, each operator shall be certified by performing 2 additional samples for each bar size and deformation pattern that will be used in the work.
- Prequalification sample splices shall be tested by an independent qualified testing laboratory and shall conform to the appropriate production test criteria and slip requirements specified herein. When epoxy-coated reinforcement is required, resistance butt welded sample splices shall have the weld flash removed by the same procedure as will be used in the work, before coating and testing. The Splice Prequalification Report shall include the certified test results for all prequalification sample splices.
- The QCM shall review and approve the Splice Prequalification Report before submitting it to the Engineer for approval. The Contractor shall allow 2 weeks for the review and approval of a complete report before performing any service splicing or ultimate butt splicing in the work. In the event the Engineer fails to complete the review within the time allowed, and in the opinion of the Engineer, completion of the work is delayed or interfered with by reason of the Engineer's delay in completing the review, the Contractor will be compensated for any resulting loss, and an extension of time will be granted, in the same manner as provided for in Section 8-1.09, "Right of Way Delays."

52-1.08C(2) Service Splice Test Criteria

- Service production and quality assurance sample splices shall be tensile tested in conformance with the requirements in ASTM Designation: A 370 and California Test 670 and shall develop a minimum tensile strength of not less than 550 MPa.

52-1.08C(2)(a) Production Test Requirements for Service Splices

- Production tests shall be performed by the Contractor's independent laboratory for all service splices used in the work. A production test shall consist of testing 4 sample splices prepared for each lot of completed splices. The samples shall be prepared by the Contractor using the same splice material, position, operators, location, and equipment, and following the same procedure as used in the work.
- At least one week before testing, the Contractor shall notify the Engineer in writing of the date when and the location where the testing of the samples will be performed.
- The 4 samples from each production test shall be securely bundled together and identified with a completed sample identification card before shipment to the independent laboratory. The card will be furnished by the Engineer. Bundles of samples containing fewer than 4 samples of splices shall not be tested.

- Before performing any tensile tests on production test sample splices, one of the 4 samples shall be tested for, and shall conform to, the requirements for total slip. Should this sample not meet the total slip requirements, one retest, in which the 3 remaining samples are tested for total slip, will be allowed. Should any of the 3 remaining samples not conform to the total slip requirements, all splices in the lot represented by this production test will be rejected.
- If 3 or more sample splices from a production test conform to the provisions in this Section 52-1.08C(2),"Service Splice Test Criteria," all splices in the lot represented by this production test will be considered acceptable, provided each of the 4 samples develop a minimum tensile strength of not less than 420 MPa.
- Should only 2 sample splices from a production test conform to the provisions in this Section 52-1.08C(2), "Service Splice Test Criteria," one additional production test shall be performed on the same lot of splices. This additional production test shall consist of testing 4 samples splices that have been randomly selected by the Engineer and removed by the Contractor from the actual completed lot of splices. Should any of the 4 splices from this additional test fail to conform to these provisions, all splices in the lot represented by these production tests will be rejected.
- If only one sample splice from a production test conforms to the provisions in this Section 52-1.08C(2), "Service Splice Test Criteria," all splices in the lot represented by this production test will be rejected.
- If a production test for a lot fails, the Contractor shall repair or replace all reinforcing bars from which sample splices were removed before the Engineer selects additional splices from this lot for further testing.

52-1.08C(2)(b) Quality Assurance Test Requirements for Service Splices

- For the first production test performed, and for at least one, randomly selected by the Engineer, of every 5 subsequent production tests, or portion thereof, the Contractor shall concurrently prepare 4 additional service quality assurance sample splices. These service quality assurance sample splices shall be prepared in the same manner as specified herein for service production sample splices.
- These 4 additional quality assurance sample splices shall be shipped to the Transportation Laboratory for quality assurance testing. The 4 sample splices shall be securely bundled together and identified by location and contract number with weatherproof markings before shipment. Bundles containing fewer than 4 samples of splices will not be tested. Sample splices not accompanied by the supporting documentation required in Section 52-1.08B(1), for mechanical splices, or in Section 52-1.08B(3), for resistance butt welds, will not be tested.
- Quality assurance testing will be performed in conformance with the requirements for service production sample splices in Section 52-1.08C(2)(a), "Production Test Requirements for Service Splices."

52-1.08C(3) Ultimate Butt Splice Test Criteria

- Ultimate production and quality assurance sample splices shall be tensile tested in conformance with the requirements described in ASTM Designation: A 370 and California Test 670.
- A minimum of one control bar shall be removed from the same bar as, and adjacent to, all ultimate production, and quality assurance sample splices. Control bars shall be 1) a minimum length of one meter for reinforcing bars No. 25 or smaller and 1.5 meters for reinforcing bars No. 29 or larger, and 2) suitably identified before shipment with weatherproof markings that do not interfere with the Engineer's tamper-proof markings or seals. The portion of adjacent bar remaining in the work shall also be identified with weatherproof markings that correspond to its adjacent control bar.
- Each sample splice and its associated control bar shall be identified and marked as a set. Each set shall be identified as representing a prequalification, production, or quality assurance sample splice.
- The portion of hoop reinforcing bar, removed to obtain a sample splice and control bar, shall be replaced using a prequalified ultimate mechanical butt splice, or the hoop shall be replaced in kind.

- Reinforcing bars, other than hoops, from which sample splices are removed, shall be repaired using ultimate mechanical butt splices conforming to the provisions in Section 52-1.08C(1), "Splice Prequalification Report," or the bars shall be replaced in kind. These bars shall be repaired or replaced such that no splices are located in any "No Splice Zone" shown on the plans.
- Ultimate production and quality assurance sample splices shall rupture in the reinforcing bar either: 1) outside of the affected zone or 2) within the affected zone, provided that the sample splice has achieved at least 95 percent of the ultimate tensile strength of the control bar associated with the sample splice. In addition, necking of the bar shall be visibly evident at rupture regardless of whether the bar breaks inside or outside the affected zone.
- The affected zone is the portion of the reinforcing bar where any properties of the bar, including the physical, metallurgical, or material characteristics, have been altered by fabrication or installation of the splice.
- The ultimate tensile strength shall be determined for all control bars by tensile testing the bars to rupture, regardless of where each sample splice ruptures. If 2 control bars are tested for one sample splice, the bar with the lower ultimate tensile strength shall be considered the control bar.

52-1.08C(3)(a) Production Test Requirements for Ultimate Butt Splices

- Production tests shall be performed for all ultimate butt splices used in the work. A production test shall consist of testing 4 sets of sample splices and control bars removed from each lot of completed splices, except when quality assurance tests are performed.
- After the splices in a lot have been completed, and the bars have been epoxy-coated when required, the QCM shall notify the Engineer in writing that the splices in this lot conform to the specifications and are ready for testing. Except for hoops, sample splices will be selected by the Engineer at the job site. Sample splices for hoops will be selected by the Engineer either at the job site or a fabrication facility.
- After notification has been received, the Engineer will randomly select the 4 sample splices to be removed from the lot and place tamper-proof markings or seals on them. The Contractor shall select the adjacent control bar for each sample splice bar, and the Engineer will place tamper-proof markings or seals on them. These ultimate production sample splices and control bars shall be removed by the Contractor, and tested by an independent qualified testing laboratory.
- At least one week before testing, the Contractor shall notify the Engineer in writing of the date when and the location where the testing of the samples will be performed.
- A sample splice or control bar from any set will be rejected if a tamper-proof marking or seal is disturbed before testing.
- The 4 sets from each production test shall be securely bundled together and identified with a completed sample identification card before shipment to the independent laboratory. The card will be furnished by the Engineer. Bundles of samples containing fewer than 4 sets of splices shall not be tested.
- Before performing any tensile tests on production test sample splices, one of the 4 sample splices shall be tested for, and shall conform to, the requirements for total slip. Should this sample splice not meet these requirements, one retest, in which the 3 remaining sample splices are tested for total slip, will be allowed. Should any of the 3 remaining sample splices not conform to these requirements, all splices in the lot represented by this production test will be rejected.
- If 3 or more sample splices from a production test conform to the provisions in Section 52-1.08C(3), "Ultimate Butt Splice Test Criteria," all splices in the lot represented by this production test will be considered acceptable.
- Should only 2 sample splices from a production test conform to the provisions in Section 52-1.08C(3), "Ultimate Butt Splice Test Criteria," one additional production test shall be performed on the same lot of splices. Should any of the 4 sample splices from this additional test fail to conform to these provisions, all splices in the lot represented by these production tests will be rejected.

- If only one sample splice from a production test conforms to the provisions in Section 52-1.08C(3), "Ultimate Butt Splice Test Criteria," all splices in the lot represented by this production test will be rejected.
- If a production test for a lot fails, the Contractor shall repair or replace all reinforcing bars from which sample splices were removed, complete in place, before the Engineer selects additional splices from this lot for further testing.
- Production tests will not be required on repaired splices from a lot, regardless of the type of prequalified ultimate mechanical butt splice used to make the repair. However, should an additional production test be required, the Engineer may select any repaired splice for the additional production test.

52-1.08C(3)(b) Quality Assurance Test Requirements for Ultimate Butt Splices

- For the first production test performed, and for at least one, randomly selected by the Engineer, of every 5 subsequent production tests, or portion thereof, the Contractor shall concurrently prepare 4 additional ultimate quality assurance sample splices along with associated control bars.
- Each time 4 additional ultimate quality assurance sample splices are prepared, 2 of these quality assurance sample splice and associated control bar sets and 2 of the production sample splice and associated control bar sets, together, shall conform to the requirements for ultimate production sample splices in Section 52-1.08C(3)(a),"Production Test Requirements for Ultimate Butt Splices."
- The 2 remaining quality assurance sample splice and associated control bar sets, along with the 2 remaining production sample splice and associated control bar sets shall be shipped to the Transportation Laboratory for quality assurance testing. The 4 sets shall be securely bundled together and identified by location and contract number with weatherproof markings before shipment. Bundles containing fewer than 4 sets will not be tested.
- Quality assurance testing will be performed in conformance with the requirements for ultimate production sample splices in Section 52-1.08C(3)(a), "Production Test Requirements for Ultimate Butt Splices."

52-1.08C(3)(c) Nondestructive Splice Tests

- When the specifications allow for welded sample splices to be taken from other than the completed lot of splices, the Contractor shall meet the following additional requirements.
- Except for resistance butt welded splices, radiographic examinations shall be performed on 25 percent of all complete joint penetration butt welded splices from a production lot. The size of a production lot will be a maximum of 150 splices. The Engineer will select the splices which will compose the production lot and also the splices within each production lot to be radiographically examined.
- All required radiographic examinations of complete joint penetration butt welded splices shall be performed by the Contractor in conformance with the requirements in AWS D 1.4 and these specifications.
- Before radiographic examination, welds shall conform to the requirements in Section 4.4, "Quality of Welds," of AWS D 1.4.
- Should more than 12 percent of the splices which have been radiographically examined in any production lot be defective, an additional 25 percent of the splices, selected by the Engineer from the same production lot, shall be radiographically examined. Should more than 12 percent of the cumulative total of splices tested from the same production lot be defective, all remaining splices in the lot shall be radiographically examined.
- Additional radiographic examinations performed due to the identification of defective splices shall be at the Contractor's expense.
- All defects shall be repaired in conformance with the requirements in AWS D 1.4.
- The Contractor shall notify the Engineer in writing 48 hours before performing any radiographic examinations.

- The radiographic procedure used shall conform to the requirements in AWS D1.1, AWS D1.4, and the following:

Two exposures shall be made for each complete joint penetration butt welded splice. For each of the 2 exposures, the radiation source shall be centered on each bar to be radiographed. The first exposure shall be made with the radiation source placed at zero degrees from the top of the weld and perpendicular to the weld root and identified with a station mark of "0." The second exposure shall be at 90 degrees to the "0" station mark and shall be identified with a station mark of "90." When obstructions prevent a 90 degree placement of the radiation source for the second exposure, and when approved in writing by the Engineer, the source may be rotated, around the centerline of the reinforcing bar, a maximum of 25 degrees.

For field produced complete joint penetration butt welds, no more than one weld shall be radiographed during one exposure. For shop produced complete joint penetration butt welds, if more than one weld is to be radiographed during one exposure, the angle between the root line of each weld and the direction to the radiation source shall be not less than 65 degrees.

Radiographs shall be made by either X-ray or gamma ray. Radiographs made by X-ray or gamma rays shall have densities of not less than 2.3 nor more than 3.5 in the area of interest. A tolerance of 0.05 in density is allowed for densitometer variations. Gamma rays shall be from the iridium 192 isotope and the emitting specimen shall not exceed 4.45 mm in the greatest diagonal dimension.

The radiographic film shall be placed perpendicular to the radiation source at all times; parallel to the root line of the weld unless source placement determines that the film must be turned; and as close to the root of the weld as possible.

The minimum source to film distance shall be maintained so as to ensure that all radiographs maintain a maximum geometric unsharpness of 0.020 at all times, regardless of the size of the reinforcing bars.

Penetrameters shall be placed on the source side of the bar and perpendicular to the radiation source at all times. One penetrameter shall be placed in the center of each bar to be radiographed, perpendicular to the weld root, and adjacent to the weld. Penetrameter images shall not appear in the weld area.

When radiography of more than one weld is being performed per exposure, each exposure shall have a minimum of one penetrameter per bar, or 3 penetrameters per exposure. When 3 penetrameters per exposure are used, one penetrameter shall be placed on each of the 2 outermost bars of the exposure, and the remaining penetrameter shall be placed on a centrally located bar.

An allowable weld buildup of 4 mm may be added to the total material thickness when determining the proper penetrameter selection. No image quality indicator equivalency will be accepted. Wire penetrameters or penetrameter blocks shall not be used.

Penetrameters shall be sufficiently shimmed using a radiographically identical material. Penetrameter image densities shall be a minimum of 2.0 and a maximum of 3.6.

Radiographic film shall be Class 1, regardless of the size of reinforcing bars.

Radiographs shall be free of film artifacts and processing defects, including, but not limited to, streaks, scratches, pressure marks or marks made for the purpose of identifying film or welding indications.

Each splice shall be clearly identified on each radiograph and the radiograph identification and marking system shall be established between the Contractor and the Engineer before radiographic inspection begins. Film shall be identified by lead numbers only; etching, flashing or writing in identifications of any type will not be permitted. Each piece of film identification information shall be legible and shall include, as a minimum, the following information: Contractor's name, date, name of nondestructive testing firm, initials of radiographer, contract number, part number and weld number. The letter "R" and repair number shall be placed directly after the weld number to designate a radiograph of a repaired weld.

Radiographic film shall be developed within a time range of one minute less to one minute more than the film manufacturer's recommended maximum development time. Sight development will not be allowed.

Processing chemistry shall be done with a consistent mixture and quality, and processing rinses and tanks shall be clean to ensure proper results. Records of all developing processes and any chemical changes to the developing processes shall be kept and furnished to the Engineer upon request. The Engineer may request, at any time, that a sheet of unexposed film be processed in the presence of the Engineer to verify processing chemical and rinse quality.

The results of all radiographic interpretations shall be recorded on a signed certification and a copy kept with the film packet.

Technique sheets prepared in conformance with the requirements in ASME Boiler and Pressure Vessels Code, Section V, Article 2 Section T-291 shall also contain the developer temperature, developing time, fixing duration and all rinse times.

52-1.08D Reporting Test Results

- A Production Test Report for all testing performed on each lot shall be prepared by the independent testing laboratory performing the testing and submitted to the QCM for review and approval. The report shall be signed by an engineer who represents the laboratory and is registered as a Civil Engineer in the State of California. The report shall include, as a minimum, the following information for each test: contract number, bridge number, lot number and location, bar size, type of splice, length of mechanical splice, length of test specimen, physical condition of test sample splice and any associated control bar, any notable defects, total measured slip, ultimate tensile strength of each splice, and for ultimate butt splices, limits of affected zone, location of visible necking area, ultimate tensile strength and 95 percent of this ultimate tensile strength for each control bar, and a comparison between 95 percent of the ultimate tensile strength of each control bar and the ultimate tensile strength of its associated splice.
- The QCM must review, approve, and forward each Production Test Report to the Engineer for review before the splices represented by the report are encased in concrete. The Engineer will have 3 working days to review each Production Test Report and respond in writing after a complete report has been received. Should the Contractor elect to encase any splices before receiving notification from the Engineer, it is expressly understood that the Contractor will not be relieved of the responsibility for incorporating material in the work that conforms to the requirements of the plans and specifications. Material not conforming to these requirements will be subject to rejection. Should the Contractor elect to wait to encase splices pending notification by the Engineer, and in the event the Engineer fails to complete the review and provide notification within the time allowed, and if, in the opinion of the Engineer, the work is delayed or interfered with by reason of the Engineer's delay in completing the review, the Contractor will be compensated for any resulting loss, and an extension of time will be granted, in the same manner as provided for in Section 8-1.09, "Right of Way Delays."
- Quality assurance test results for each bundle of 4 sets or 4 samples of splices will be reported in writing to the Contractor within 3 working days after receipt of the bundle by the Transportation Laboratory. In the event that more than one bundle is received on the same day, 2 additional working days shall be allowed for providing test results for each additional bundle received. A test report will be made for each bundle received. Should the Contractor elect to encase splices before receiving notification from the Engineer, it is expressly understood that the Contractor will not be relieved of the responsibility for incorporating material in the work that conforms to the requirements of the plans and specifications. Material not conforming to these requirements will be subject to rejection. Should the Contractor elect to wait to encase splices pending notification by the Engineer, and in the event the Engineer fails to complete the review within the time allowed, and in the opinion of the Engineer, completion of the work is delayed or interfered with by reason of the Engineer's delay in completing the review, the Contractor will be compensated for any resulting loss, and an extension of time will be granted, in the same manner as provided for in Section 8-1.09, "Right of Way Delays."

SECTION 55: STEEL STRUCTURES

Issue Date: December 31, 2001

Section 55-3.14, "Bolted Connections," of the Standard Specifications is amended by adding the following after the ninth paragraph:

- If a torque multiplier is used in conjunction with a calibrated wrench as a method for tightening fastener assemblies to the required tension, both the multiplier and the wrench shall be calibrated together as a system. The same length input and output sockets and extensions that will be used in the work shall also be included in the calibration of the system. The manufacturer's torque multiplication ratio shall be adjusted during calibration of the system, such that when this adjusted ratio is multiplied by the actual input calibrated wrench reading, the product is a calculated output torque that is within 2 percent of the true output torque. When this system is used in the work to perform any installation tension testing, rotational capacity testing, fastener tightening, or tension verification, it shall be used, intact as calibrated.

The sixth paragraph of Section 55-4.02, "Payment," of the Standard Specifications is amended to read:

- If a portion or all of the structural steel is fabricated more than 480 air line kilometers from both Sacramento and Los Angeles, additional shop inspection expenses will be sustained by the State. Whereas it is and will be impracticable and extremely difficult to ascertain and determine the actual increase in these expenses, it is agreed that payment to the Contractor for furnishing the structural steel from each fabrication site located more than 480 air line kilometers from both Sacramento and Los Angeles will be reduced $5000 or by an amount computed at $0.044 per kilogram of structural steel fabricated, whichever is greater, or in the case of each fabrication site located more than 4800 air line kilometers from both Sacramento and Los Angeles, payment will be reduced $8000 or by $0.079 per kilogram of structural steel fabricated, whichever is greater.

SECTION 56: SIGNS

Issue Date: December 31, 2001

Section 56-1.01, "Description," of the Standard Specifications is amended by deleting the third paragraph.

The sixth through the thirteenth paragraphs in Section 56-1.03, "Fabrication," of the Standard Specifications are amended to read:

- High-strength bolted connections, where shown on the plans, shall conform to the provisions in Section 55-3.14, "Bolted Connections," except that only fastener assemblies consisting of a high-strength bolt, nut, hardened washer, and direct tension indicator shall be used.
- High-strength fastener assemblies, and any other bolts, nuts, and washers attached to sign structures shall be zinc-coated by the mechanical deposition process.
- An alternating snugging and tensioning pattern for anchor bolts and high-strength bolted splices shall be used. Once tensioned, high-strength fastener components and direct tension indicators shall not be reused.
- For bolt diameters less than 10 mm, the diameter of the bolt hole shall be not more than 0.80-mm larger than the nominal bolt diameter. For bolt diameters greater than or equal to 10 mm, the diameter of the bolt hole shall be not more than 1.6 mm larger than the nominal bolt diameter.
- Sign structures shall be fabricated into the largest practical sections prior to galvanizing.

- Ribbed sheet metal panels for box beam closed truss sign structures shall be fastened to the truss members by cap screws or bolts as shown on the plans, or by 4.76 mm stainless steel blind rivets conforming to Industrial Fasteners Institute, Standard IFI-114, Grade 51. The outside diameter of the large flange rivet head shall be not less than 15.88 mm in diameter. Web splices in ribbed sheet metal panels may be made with similar type blind rivets of a size suitable for the thickness of material being connected.
- Spalling or chipping of concrete structures shall be repaired by the Contractor at the Contractor's expense.
- Overhead sign supports shall have an aluminum identification plate permanently attached near the base, adjacent to the traffic side on one of the vertical posts, using either stainless steel rivets or stainless steel screws. As a minimum, the information on the plate shall include the name of the manufacturer, the date of manufacture and the contract number.

SECTION 59: PAINTING

Issue Date: December 31, 2001

Section 59-2.01, "General," of the Standard Specifications is amended by adding the following paragraphs after the first paragraph:

- Unless otherwise specified, no painting Contractors or subcontractors will be permitted to commence work without having the following current "SSPC: The Society for Protective Coatings" (formerly the Steel Structures Painting Council) certifications in good standing:

A. For cleaning and painting structural steel in the field, certification in conformance with the requirements in Qualification Procedure No. 1, "Standard Procedure For Evaluating Painting Contractors (Field Application to Complex Industrial Structures)" (SSPC-QP 1).
B. For removing paint from structural steel, certification in conformance with the requirements in Qualification Procedure No. 2, "Standard Procedure For Evaluating Painting Contractors (Field Removal of Hazardous Coatings from Complex Structures)" (SSPC-QP 2).
C. For cleaning and painting structural steel in a permanent painting facility, certification in conformance with the requirements in Qualification Procedure No. 3, "Standard Procedure For Evaluating Qualifications of Shop Painting Applicators" (SSPC-QP 3). The AISC's Sophisticated Paint Endorsement (SPE) quality program will be considered equivalent to SSPC-QP 3.

The third paragraph of Section 59-2.03, "Blast Cleaning," of the Standard Specifications is amended to read:

- Exposed steel or other metal surfaces to be blast cleaned shall be cleaned in conformance with the requirements in Surface Preparation Specification No. 6, "Commercial Blast Cleaning," of the "SSPC: The Society for Protective Coatings." Blast cleaning shall leave all surfaces with a dense, uniform, angular anchor pattern of not less than 35 µm as measured in conformance with the requirements in ASTM Designation: D 4417.

The first paragraph of Section 59-2.06, "Hand Cleaning," of the Standard Specifications is amended to read:

- Dirt, loose rust and mill scale, or paint which is not firmly bonded to the surfaces shall be removed in conformance with the requirements in Surface Preparation Specification No. 2, "Hand Tool Cleaning," of the "SSPC: The Society for Protective Coatings." Edges of old remaining paint shall be feathered.

The fourth paragraph of Section 59-2.12, "Painting," of the Standard Specifications is amended to read:

- The dry film thickness of the paint will be measured in place with a calibrated Type 2 magnetic film thickness gage in conformance with the requirements of specification SSPC-PA2 of the "SSPC: The Society for Protective Coatings."

SECTION 75: MISCELLANEOUS METAL

Issue Date: December 31, 2001

The table in the tenth paragraph of Section 75-1.02, "Miscellaneous Iron and Steel," of the Standard Specifications is amended to read:

Material	Specification
Steel bars, plates and shapes	ASTM Designation: A 36/A 36M or A 575, A 576 (AISI or M Grades 1016 through 1030 except Grade 1017)
Steel fastener components for general applications:	
Bolts and studs	ASTM Designation: A 307
Headed anchor bolts	ASTM Designation: A 307, Grade B, including S1 supplementary requirements
Nonheaded anchor bolts	ASTM Designation: A 307, Grade C, including S1 supplementary requirements and S1.6 of AASHTO Designation: M 314 supplementary requirements or AASHTO Designation: M 314, Grade 36 or 55, including S1 supplementary requirements
High-strength bolts and studs, threaded rods, and nonheaded anchor bolts	ASTM Designation: A 449, Type 1
Nuts	ASTM Designation: A 563, including Appendix X1*
Washers	ASTM Designation: F 844
Components of high-strength steel fastener assemblies for use in structural steel joints:	
Bolts	ASTM Designation: A 325, Type 1
Tension control bolts	ASTM Designation: F 1852, Type 1
Nuts	ASTM Designation: A 563, including Appendix X1*
Hardened washers	ASTM Designation: F 436, Type 1, Circular, including S1 supplementary requirements
Direct tension indicators	ASTM Designation: F 959, Type 325, zinc-coated
Stainless steel fasteners (Alloys 304 & 316) for general applications:	
Bolts, screws, studs, threaded rods, and nonheaded anchor bolts	ASTM Designation: F 593 or F 738M
Nuts	ASTM Designation: F 594 or F 836M
Washers	ASTM Designation: A 240/A 240M and ANSI B 18.22M
Carbon-steel castings	ASTM Designation: A 27/A 27M, Grade 65-35 [450-240], Class 1
Malleable iron castings	ASTM Designation: A 47, Grade 32510 or A 47M, Grade 22010
Gray iron castings	ASTM Designation: A 48, Class 30B
Ductile iron castings	ASTM Designation: A 536, Grade 65-45-12
Cast iron pipe	Commercial quality
Steel pipe	Commercial quality, welded or extruded
Other parts for general applications	Commercial quality

* Zinc-coated nuts that will be tightened beyond snug or wrench tight shall be furnished with a dyed dry lubricant conforming to Supplementary Requirement S2 in ASTM Designation: A 563.

The table in the eighteenth paragraph of Section 75-1.03, "Miscellaneous Bridge Metal," of the Standard Specifications is amended to read:

Stud Diameter (millimeters)	Sustained Tension Test Load (kilonewtons)
29.01-33.00	137.9
23.01-29.00	79.6
21.01-23.00	64.1
* 18.01-21.00	22.2
15.01-18.00	18.2
12.01-15.00	14.2
9.01-12.00	9.34
6.00-9.00	4.23

* Maximum stud diameter permitted for mechanical expansion anchors.

The table in the nineteenth paragraph of Section 75-1.03, "Miscellaneous Bridge Metal," of the Standard Specifications is amended to read:

Stud Diameter (millimeters)	Ultimate Tensile Load (kilonewtons)
30.01-33.00	112.1
27.01-30.00	88.1
23.01-27.00	71.2
20.01-23.00	51.6
16.01-20.00	32.0
14.01-16.00	29.4
12.00-14.00	18.7

The table in the twenty-second paragraph of Section 75-1.03, "Miscellaneous Bridge Metal," of the Standard Specifications is amended to read:

Installation Torque Values, (newton meters)

Stud Diameter (millimeters)	Shell Type Mechanical Expansion Anchors	Integral Stud Type Mechanical Expansion Anchors	Resin Capsule Anchors and Cast-in-Place Inserts
29.01-33.00	—	—	540
23.01-29.00	—	—	315
21.01-23.00	—	—	235
18.01-21.00	110	235	200
15.01-18.00	45	120	100
12.01-15.00	30	65	40
9.01-12.00	15	35	24
6.00-9.00	5	10	—

SECTION 83: RAILINGS AND BARRIERS

Issue Date: June 13, 2002

The ninth paragraph in Section 83-1.02B, "Metal Beam Guard Railing," of the Standard Specifications is amended to read:

- The grades and species of wood posts and blocks shall be No. 1 timbers (also known as No. 1 structural) Douglas fir or No. 1 timbers Southern yellow pine. Wood posts and blocks shall be graded in conformance with the provisions in Section 57-2, "Structural Timber," of the Standard Specifications, except allowances for shrinkage after mill cutting shall in no case exceed 5 percent of the American Lumber Standards minimum sizes, at the time of installation.

The eleventh paragraph in Section 83-1.02B, "Metal Beam Guard Railing," of the Standard Specifications is amended to read:

- Wood posts and blocks shall be pressure treated after fabrication in conformance with the provisions in Section 58, "Preservative Treatment of Lumber, Timber and Piling," of the Standard Specifications with creosote, creosote coal tar solution, creosote petroleum solution (50-50), pentachlorophenol in hydrocarbon solvent, copper naphthenate, ammoniacal copper arsenate, or ammoniacal copper zinc arsenate. In addition to the preservatives listed above, Southern yellow pine may also be pressure treated with chromated copper arsenate. When other than one of the creosote processes is used, blocks shall have a minimum retention of 6.4 Kg/m^3, and need not be incised.

SECTION 85: PAVEMENT MARKERS

Issue Date: May 16, 2003

The second through fifth paragraphs in Section 85-1.03, "Sampling, Tolerances and Packaging," of the Standard Specifications are amended to read:

Sampling

- Twenty markers selected at random will constitute a representative sample for each lot of markers.
- The lot size shall not exceed 25000 markers.

Tolerances

- Three test specimens will be randomly selected from the sample for each test and tested in conformance with these specifications. Should any one of the 3 specimens fail to conform with the requirements in these specifications, 6 additional specimens will be tested. The failure of any one of these 6 specimens shall be cause for rejection of the entire lot or shipment represented by the sample.
- The entire sample of retroreflective pavement markers will be tested for reflectance. The failure of 10 percent or more of the original sampling shall be cause for rejection.

Section 85-1.04, "Non-Reflective Pavement Markers," of the Standard Specifications is amended to read:

85-1.04 Non-Reflective Pavement Markers

- Non-reflective pavement markers (Types A and AY) shall be, at the option of the Contractor, either ceramic or plastic conforming to these specifications.
- The top surface of the marker shall be convex with a gradual change in curvature. The top, bottom and sides shall be free of objectionable marks or discoloration that will affect adhesion or appearance.

- The bottom of markers shall have areas of integrally formed protrusions or indentations, which will increase the effective bonding surface area of adhesive. The bottom surface of the marker shall not deviate more than 1.5 mm from a flat surface. The areas of protrusion shall have faces parallel to the bottom of the marker and shall project approximately one mm from the bottom.

The second through fourth paragraphs of Section 85-1.04A, "Non-Reflective Pavement Markers (Ceramic)," of the Standard Specifications are deleted.

The table in the fifth paragraph in Section 85-1.04A, "Non-Reflective Pavement Markers (Ceramic)," of the Standard Specifications is amended to read:

Testing

- Tests shall be performed in conformance with the requirements in California Test 669.

Test	Test Description	Requirement
a	Bond strength	4.8 MPa, min.
b	Glaze thickness	180 µm, min.
c	Hardness	6 Moh, min.
d	Luminance factor, Type A, white markers only, glazed surface	75, min.
e	Yellowness index, Type A, white markers only, glazed surface	7, max.
f	Color-yellow, Type AY, yellow markers only. The chromaticity coordinates shall be within a color box defined in CTM 669	Pass
g	Compressive strength	6700 N, min.
h	Water absorption	2.0 %, max.
i	Artificial weathering, 500 hours exposure, yellowness index	20, max.

Section 85-1.04B, "Non-Reflective Pavement Markers (Plastic)," of the Standard Specifications is amended to read:

85-1.04B Non-Reflective Pavement Markers (Plastic)

- Plastic non-reflective pavement markers Types A and AY shall be, at the option of the Contractor, either polypropylene or acrylonitrile-butadiene-styrene (ABS) plastic type.
- Plastic markers shall conform to the testing requirements specified in Section 85-1.04A, "Non-Reflective Pavement Markers (Ceramic)," except that Tests a, b, c, and h shall not apply. The plastic markers shall not be coated with substances that interfere with the ability of the adhesive bonding to the marker.

The sixth and seventh paragraphs in Section 85-1.05, "Retroreflective Pavement Markers," of the Standard Specifications are amended to read:

Testing

- Tests shall be performed in conformance with the requirements in California Test 669.

Test Description	Requirement		
Bond strength[a]	3.4 MPa, min.		
Compressive strength[b]	8900 N, min.		
Abrasion resistance, marker must meet the respective specific intensity minimum requirements after abrasion.	Pass		
Water Soak Resistance	No delamination of the body or lens system of the marker nor loss of reflectance		
	Specific Intensity		
Reflectance	Clear	Yellow	Red
0° Incidence Angle, min.	3.0	1.5	0.75
20° Incidence Angle, min.	1.2	0.60	0.30
After one year field evaluation	0.30	0.15	0.08

a Failure of the marker body or filler material prior to reaching 3.4 MPa shall constitute a failing bond strength test.
b Deformation of the marker of more than 3 mm at a load of less than 8900 N or delamination of the shell and the filler material of more than 3 mm regardless of the load required to break the marker shall be cause for rejection of the markers as specified in Section 85-1.03, "Sampling, Tolerances and Packaging."

- Pavement markers to be placed in pavement recesses shall conform to the above requirements for retroreflective pavement markers except that the minimum compressive strength requirement shall be 5338 N.

The eighth paragraph of Section 85-1.05, "Retrorelective Pavement Markers" of the Standard Specifications is deleted.

The eighth paragraph in Section 85-1.06, "Replacement," of the Standard Specifications is amended to read:

- Epoxy adhesive shall not be used to apply non-reflective plastic pavement markers.

SECTION 86: SIGNALS, LIGHTING AND ELECTRICAL SYSTEMS

Issue Date: June 19, 2003

The seventh paragraph of Section 86-2.03, "Foundations," of the Standard Specifications is amended to read:

- Forms shall be true to line and grade. Tops of foundations for posts and standards, except special foundations, shall be finished to curb or sidewalk grade or as directed by the Engineer. Forms shall be rigid and securely braced in place. Conduit ends and anchor bolts shall be placed in proper position and to proper height, and anchor bolts shall be held in place by means of rigid top and bottom templates. The bottom template shall be made of steel. The bottom template shall provide proper spacing and alignment of the anchor bolts near their bottom embedded end. The bottom template shall be installed before placing footing concrete. Anchor bolts shall not be installed more than 1:40 from vertical.

Section 86-2.03, "Foundations," of the Standard Specifications is amended by deleting the eighth paragraph.

The twelfth paragraph of Section 86-2.03, "Foundations," of the Standard Specifications is amended to read:

• Plumbing of the standards shall be accomplished by adjusting the leveling nuts before placing the mortar or before the foundation is finished to final grade. Shims, or other similar devices shall not be used for plumbing or raking of posts, standards or pedestals. After final adjustments of both top nuts and leveling nuts on anchorage assemblies have been made, firm contact shall exist between all bearing surfaces of the anchor bolt nuts, washers, and the base plate.

The first paragraph of Section 86-2.04, "Standards, Steel Pedestals and Posts," of the Standard Specifications is amended to read:

• Standards for traffic signals and lighting, and steel pedestals for cabinets and other similar equipment, shall be located as shown on the plans. Bolts, nuts and washers, and anchor bolts for use in signal and lighting support structures shall conform to the provisions in Section 55-2, "Materials." Except when bearing-type connections or slipbases are specified, high-strength bolted connections shall conform to the provisions in Section 55-3.14, "Bolted Connections." Welding, nondestructive testing (NDT) of welds, and acceptance and repair criteria for NDT of steel members shall conform to the requirements of AWS D1.1 and the contract special provisions.

The second paragraph of Section 86-2.04, "Standards, Steel Pedestals and Posts," of the Standard Specifications is amended to read:

• On each lighting standard except Type 1, one rectangular corrosion resistant metal identification tag shall be permanently attached above the hand hole, near the base of the standard, using stainless steel rivets. On each signal pole support, two corrosion resistant metal identification tags shall be attached, one above the hand hole near the base of the vertical standard and one on the underside of the signal mast arm near the arm plate. As a minimum, the information on each identification tag shall include the name of the manufacturer, the date of manufacture, the identification number as shown on the plans, the contract number, and a unique identification code assigned by the fabricator. This number shall be traceable to a particular contract and the welds on that component, and shall be readable after the support structure is coated and installed. The lettering shall be a minimum of 7 mm high. The information may be either depressed or raised, and shall be legible.

The fourth paragraph of Section 86-2.04, "Standards, Steel Pedestals and Posts" of the Standard Specifications is amended to read:

• Ferrous metal parts of standards, with shaft length of 4.6 m and longer, shall conform to the details shown on the plans, the provisions in Section 55, "Steel Structures," except as otherwise noted, and the following requirements:

Except as otherwise specified, standards shall be fabricated from sheet steel of weldable grade having a minimum yield strength, after fabrication, of 276 MPa.

Certified test reports which verify conformance to the minimum yield strength requirements shall be submitted to the Engineer. The test reports may be the mill test reports for the as-received steel or, when the as-received steel has a lower yield strength than required, the Contractor shall provide supportive test data which provides assurance that the Contractor's method of cold forming will consistently increase the tensile properties of the steel to meet the specified minimum yield strength. The supportive test data shall include tensile properties of the steel after cold forming for specific heats and thicknesses.

When a single-ply 8-mm thick pole is specified, a 2-ply pole with equivalent section modulus may be substituted.

Standards may be fabricated of full-length sheets or shorter sections. Each section shall be fabricated from not more than 2 pieces of sheet steel. Where 2 pieces are used, the longitudinal welded seams shall be directly opposite one another. When the sections are butt-welded together, the longitudinal welded seams on adjacent sections shall be placed to form continuous straight seams from base to top of standard.

Butt-welded circumferential joints of tubular sections requiring CJP groove welds shall be made using a metal sleeve backing ring inside each joint. The sleeve shall be 3-mm nominal thickness, or thicker, and manufactured from steel having the same chemical composition as the steel in the tubular sections to be joined. When the sections to be joined have different specified minimum yield strengths, the steel in the sleeve shall have the same chemical composition as the tubular section having the higher minimum yield strength. The width of the metal sleeve shall be consistent with the type of NDT chosen and shall be a minimum width of 25 mm. The sleeve shall be centered at the joint and be in contact with the tubular section at the point of the weld at time of fit-up.

Welds shall be continuous.

The weld metal at the transverse joint shall extend to the sleeve, making the sleeve an integral part of the joint.

During fabrication, longitudinal seams on vertical tubular members of cantilevered support structures shall be centered on and along the side of the pole that the pole plate is located. Longitudinal seams on horizontal tubular members, including signal and luminaire arms, shall be within +/-45 degrees of the bottom of the arm.

The longitudinal welds in steel tubular sections may be made by the electric resistance welding process.

Longitudinal seam welds shall have 60 percent minimum penetration, except that within 150 mm of circumferential welds, longitudinal seam welds shall be CJP groove welds. In addition, longitudinal seam welds on lighting support structures having telescopic pole segment splices shall be CJP groove welds on the female end for a length on each end equal to the designated slip fit splice length plus 150 mm.

Exposed circumferential welds, except fillet and fatigue-resistant welds, shall be ground flush (-0, +2mm) with the base metal prior to galvanizing or painting.

Circumferential welds and base plate-to-pole welds may be repaired only one time without written permission from the Engineer.

Exposed edges of the plates that make up the base assembly shall be finished smooth and exposed corners of the plates shall be broken unless otherwise shown on the plans. Shafts shall be provided with slip-fitter shaft caps.

Flatness of surfaces of 1) base plates that are to come in contact with concrete, grout, or washers and leveling nuts 2) plates in high-strength bolted connections, 3) plates in joints where cap screws are used to secure luminaire and signal arms, and 4) plates used for breakaway slip base assemblies shall conform to the requirements of ASTM A6.

Standards shall be straight, with a permissive variation not to exceed 25 mm measured at the midpoint of a 9-m or 11-m standard and not to exceed 20 mm measured at the midpoint of a 5-m through 6-m standard. Variation shall not exceed 25 mm at a point 4.5 m above the base plate for Type 35 and Type 36 standards.

Zinc-coated nuts used on fastener assemblies having a specified preload (obtained by specifying a prescribed tension, torque value, or degree of turn) shall be provided with a colored lubricant that is clean and dry to the touch. The color of the lubricant shall be in contrast to the zinc coating on the nut so that the presence of the lubricant is visually obvious. In addition, either the lubricant shall be insoluble in water, or fastener components shall be shipped to the job site in a sealed container.

No holes shall be made in structural members unless the holes are shown on the plans or are approved in writing by the Engineer.

Standards with an outside diameter of 300 mm or less shall be round. Standards with an outside diameter greater than 300 mm shall be round or multisided. Multisided standards shall have a minimum of 12 sides which shall be convex and shall have a minimum bend radius of 100 mm.

Mast arms for standards shall be fabricated from material as specified for standards, and shall conform to the dimensions shown on the plans.

The cast steel option for slip bases shall be fabricated from material conforming to the requirements in ASTM Designation: A 27/A 27M, Grade 70-40. Other comparable material may be used if written permission is given by the Engineer. The casting tolerances shall be in conformance with the Steel Founder's Society of America recommendations (green sand molding).

One casting from each lot of 50 castings or less shall be subject to radiographic inspection, in conformance with the requirements in ASTM Designation: E 94. The castings shall comply with the acceptance criteria severity level 3 or better for the types and categories of discontinuities in conformance with the requirements in ASTM Designations: E 186 and E 446. If the one casting fails to pass the inspection, 2 additional castings shall be radiographed. Both of these castings shall pass the inspection or the entire lot of 50 will be rejected.

Material certifications, consisting of physical and chemical properties, and radiographic films of the castings shall be filed at the manufacturer's office. These certifications and films shall be available for inspection upon request.

High-strength bolts, nuts and flat washers used to connect slip base plates shall conform to the requirements in ASTM Designation: A 325 or A 325M and shall be galvanized in conformance with the provisions in Section 75-1.05, "Galvanizing."

Plate washers shall be fabricated by saw cutting and drilling steel plate conforming to the requirements in AISI Designation: 1018, and be galvanized in conformance with the provisions in Section 75-1.05, "Galvanizing." Prior to galvanizing, burrs and sharp edges shall be removed and holes shall be chamfered sufficiently on each side to allow the bolt head to make full contact with the washer without tension on the bolt.

High-strength cap screws shown on the plans for attaching arms to standards shall conform to the requirements in ASTM Designation: A 325, A 325M or ASTM Designation: A 449, and shall comply with the mechanical requirements in ASTM Designation: A 325 or A 325M after galvanizing. The cap screws shall be galvanized in conformance with the provisions in Section 75-1.05, "Galvanizing." The threads of the cap screws shall be coated with a colored lubricant that is clean and dry to the touch. The color of the lubricant shall be in contrast to the color of the zinc coating on the cap screw so that presence of the lubricant is visually obvious. In addition, either the lubricant shall be insoluble in water, or fastener components shall be shipped to the job site in a sealed container.

Unless otherwise specified, bolted connections attaching signal or luminaire arms to poles shall be considered slip critical. Galvanized faying surfaces on plates on luminaire and signal arms and matching plate surfaces on poles shall be roughened by hand using a wire brush prior to assembly and shall conform to the requirements for Class C surface conditions for slip-critical connections in "Specification for Structural Joints Using ASTM A 325 or A 490 Bolts," a specification approved by the Research Council on Structural Connections (RCSC) of the Engineering Foundation. For faying surfaces required to be painted, the paint shall be an approved type, brand, and thickness that has been tested and approved according to the RCSC Specification as a Class B coating.

Samples of fastener components will be randomly taken from each production lot by the Engineer and submitted, along with test reports required by appropriate ASTM fastener specifications, for QA testing and evaluation. Sample sizes for each fastener component shall be as determined by the Engineer.

The seventh paragraph of 86-2.04, "Standards, Steel Pedestals and Posts" of the Standard Specifications is amended to read:

• To avoid interference of arm plate-to-tube welds with cap screw heads, and to ensure cap screw heads can be turned using conventional installation tools, fabricators shall make necessary adjustments to details prior to fabrication and properly locate the position of arm tubes on arm plates during fabrication.

Section 86-8.01, "Payment," of the Standard Specifications is amended by adding the following paragraph after the first paragraph:

• If a portion or all of the poles for signal, lighting and electrical systems pursuant to Standard Specification Section 86, "Signals, Lighting and Electrical Systems," is fabricated more than 480 air line kilometers from both-Sacramento and Los Angeles, additional shop inspection expenses will be sustained by the State. Whereas it is and will be impracticable and extremely difficult to ascertain and determine the actual increase in such expenses, it is agreed that payment to the Contractor for furnishing such items from each fabrication site located more than 480 air line kilometers from both Sacramento and Los Angeles will be reduced $5000; in addition, in the case where a fabrication site is located more than 4800 air line kilometers from both Sacramento and Los Angeles, payment will be reduced an additional $3000 per each fabrication site ($8000 total per site).

SECTION 88: ENGINEERING FABRIC

Issue Date: January 15, 2002

Section 88-1.02, "Pavement Reinforcing Fabric," of the Standard Specifications is amended to read:

• Pavement reinforcing fabric shall be 100 percent polypropylene staple fiber fabric material, needle-punched, thermally bonded on one side, and conform to the following:

Specification	Requirement
Weight, grams per square meter ASTM Designation: D 5261	140
Grab tensile strength (25-mm grip), kilonewtons, min. in each direction ASTM Designation: D 4632	0.45
Elongation at break, percent min. ASTM Designation: D 4632	50
Asphalt retention by fabric, grams per square meter. (Residual Minimum) ASTM Designation: D 6140	900

Note: Weight, grab, elongation and asphalt retention are based on Minimum Average Roll Value (MARV)

SECTION 90: PORTLAND CEMENT CONCRETE

Issue Date: June 19, 2003

Section 90, "Portland Cement Concrete," of the Standard Specifications is amended to read:

SECTION 90: PORTLAND CEMENT CONCRETE
90-1 GENERAL

90-1.01 DESCRIPTION

- Portland cement concrete shall be composed of cementitious material, fine aggregate, coarse aggregate, admixtures if used, and water, proportioned and mixed as specified in these specifications.
- The Contractor shall determine the mix proportions for concrete in conformance with these specifications. Unless otherwise specified, cementitious material shall be a combination of cement and mineral admixture. Cementitious material shall be either:

1. "Type IP (MS) Modified" cement; or
2. A combination of "Type II Modified" portland cement and mineral admixture; or
3. A combination of Type V portland cement and mineral admixture.

- Type III portland cement shall be used only as allowed in the special provisions or with the approval of the Engineer.
- Class 1 concrete shall contain not less than 400 kg of cementitious material per cubic meter.
- Class 2 concrete shall contain not less than 350 kg of cementitious material per cubic meter.
- Class 3 concrete shall contain not less than 300 kg of cementitious material per cubic meter.
- Class 4 concrete shall contain not less than 250 kg of cementitious material per cubic meter.
- Minor concrete shall contain not less than 325 kg of cementitious material per cubic meter unless otherwise specified in these specifications or the special provisions.
- Unless otherwise designated on the plans or specified in these specifications or the special provisions, the amount of cementitious material used per cubic meter of concrete in structures or portions of structures shall conform to the following:

Use	Cementitious Material Content (kg/m3)
Concrete designated by compressive strength:	
Deck slabs and slab spans of bridges	400 min., 475 max.
Roof sections of exposed top box culverts	400 min., 475 max.
Other portions of structures	350 min., 475 max.
Concrete not designated by compressive strength:	
Deck slabs and slab spans of bridges	400 min.
Roof sections of exposed top box culverts	400 min.
Prestressed members	400 min.
Seal courses	400 min.
Other portions of structures	350 min.
Concrete for precast members	350 min., 550 max.

- Whenever the 28-day compressive strength shown on the plans is greater than 25 MPa, the concrete shall be designated by compressive strength. If the plans show a 28-day compressive strength that is 28 MPa or greater, an additional 14 days will be allowed to obtain the specified strength. The 28-day compressive strengths shown on the plans that are 25 MPa or less are shown for design information only and are not a requirement for acceptance of the concrete.
- Concrete designated by compressive strength shall be proportioned such that the concrete will attain the strength shown on the plans or specified in the special provisions.

• Before using concrete for which the mix proportions have been determined by the Contractor, or in advance of revising those mix proportions, the Contractor shall submit in writing to the Engineer a copy of the mix design.

• Compliance with cementitious material content requirements will be verified in conformance with procedures described in California Test 518 for cement content. For testing purposes, mineral admixture shall be considered to be cement. Batch proportions shall be adjusted as necessary to produce concrete having the specified cementitious material content.

• If any concrete has a cementitious material, portland cement, or mineral admixture content that is less than the minimum required, the concrete shall be removed. However, if the Engineer determines that the concrete is structurally adequate, the concrete may remain in place and the Contractor shall pay to the State $0.55 for each kilogram of cementitious material, portland cement, or mineral admixture that is less than the minimum required. The Department may deduct the amount from any moneys due, or that may become due, the Contractor under the contract. The deductions will not be made unless the difference between the contents required and those actually provided exceeds the batching tolerances permitted by Section 90-5, "Proportioning." No deductions will be made based on the results of California Test 518.

• The requirements of the preceding paragraph shall not apply to minor concrete or commercial quality concrete.

90-2 MATERIALS

90-2.01 CEMENT

• Unless otherwise specified, cement shall be either "Type IP (MS) Modified" cement, "Type II Modified" portland cement or Type V portland cement.

• "Type IP (MS) Modified" cement shall conform to the requirements for Type IP (MS) cement in ASTM Designation: C 595, and shall be comprised of an intimate and uniform blend of Type II cement and not more than 35 percent by mass of mineral admixture. The type and minimum amount of mineral admixture used in the manufacture of "Type IP (MS) Modified" cement shall be in conformance with the provisions in Section 90-4.08, "Required Use of Mineral Admixtures."

• "Type II Modified" portland cement shall conform to the requirements for Type II portland cement in ASTM Designation: C 150.

• In addition, "Type IP (MS) Modified" cement and "Type II Modified" portland cement shall conform to the following requirements:

A. The cement shall not contain more than 0.60-percent by mass of alkalies, calculated as the percentage of Na_2O plus 0.658 times the percentage of K_2O, when determined by either direct intensity flame photometry or by the atomic absorption method. The instrument and procedure used shall be qualified as to precision and accuracy in conformance with the requirements in ASTM Designation: C 114;
B. The autoclave expansion shall not exceed 0.50-percent; and
C. Mortar, containing the cement to be used and Ottawa sand, when tested in conformance with California Test 527, shall not expand in water more than 0.010 percent and shall not contract in air more than 0.048 percent, except that when cement is to be used for precast prestressed concrete piling, precast prestressed concrete members, or steam cured concrete products, the mortar shall not contract in air more than 0.053 percent.

• Type III and Type V portland cements shall conform to the requirements in ASTM Designation: C 150 and the additional requirements listed above for "Type II Modified" portland cement, except that when tested in

conformance with California Test 527, mortar containing Type III portland cement shall not contract in air more than 0.075 percent.

- Cement used in the manufacture of cast-in-place concrete for exposed surfaces of like elements of a structure shall be from the same cement mill.
- Cement shall be protected from exposure to moisture until used. Sacked cement shall be piled to permit access for tally, inspection, and identification of each shipment.
- Adequate facilities shall be provided to assure that cement meeting the provisions specified in this Section 90-2.01 shall be kept separate from other cement in order to prevent any but the specified cement from entering the work. Safe and suitable facilities for sampling cement shall be provided at the weigh hopper or in the feed line immediately in advance of the hopper, in conformance with California Test 125.
- If cement is used prior to sampling and testing as provided in Section 6-1.07, "Certificates of Compliance," and the cement is delivered directly to the site of the work, the Certificate of Compliance shall be signed by the cement manufacturer or supplier of the cement. If the cement is used in ready-mixed concrete or in precast concrete products purchased as such by the Contractor, the Certificate of Compliance shall be signed by the manufacturer of the concrete or product.
- Cement furnished without a Certificate of Compliance shall not be used in the work until the Engineer has had sufficient time to make appropriate tests and has approved the cement for use.

90-2.02 AGGREGATES

- Aggregates shall be free from deleterious coatings, clay balls, roots, bark, sticks, rags, and other extraneous material.
- Natural aggregates shall be thoroughly and uniformly washed before use.
- The Contractor, at the Contractor's expense, shall provide safe and suitable facilities, including necessary splitting devices for obtaining samples of aggregates, in conformance with California Test 125.
- Aggregates shall be of such character that it will be possible to produce workable concrete within the limits of water content provided in Section 90-6.06, "Amount of Water and Penetration."
- Aggregates shall have not more than 10 percent loss when tested for soundness in conformance with the requirements in California Test 214. The soundness requirement for fine aggregate will be waived, provided that the durability index, D_f, of the fine aggregate is 60, or greater, when tested for durability in conformance with California Test 229.
- If the results of any one or more of the Cleanness Value, Sand Equivalent, or aggregate grading tests do not meet the requirements specified for "Operating Range" but all meet the "Contract Compliance" requirements, the placement of concrete shall be suspended at the completion of the current pour until tests or other information indicate that the next material to be used in the work will comply with the requirements specified for "Operating Range."
- If the results of either or both the Cleanness Value and coarse aggregate grading tests do not meet the requirements specified for "Contract Compliance," the concrete that is represented by the tests shall be removed. However, if the Engineer determines that the concrete is structurally adequate, the concrete may remain in place, and the Contractor shall pay to the State $4.60 per cubic meter for paving concrete and $7.20 per cubic meter for all other concrete for the concrete represented by these tests and left in place. The Department may deduct the amount from any moneys due, or that may become due, the Contractor under the contract.
- If the results of either or both the Sand Equivalent and fine aggregate grading tests do not meet the requirements specified for "Contract Compliance," the concrete which is represented by the tests shall be removed. However, if the Engineer determines that the concrete is structurally adequate, the concrete may remain in place, and the Contractor shall pay to the State $4.60 per cubic meter for paving concrete and $7.20 per cubic meter for all other concrete for the concrete represented by these tests and left in place. The

Department may deduct the amount from any moneys due, or that may become due, the Contractor under the contract.

- The 2 preceding paragraphs apply individually to the "Contract Compliance" requirements for coarse aggregate and fine aggregate. When both coarse aggregate and fine aggregate do not conform to the "Contract Compliance" requirements, both paragraphs shall apply. The payments specified in those paragraphs shall be in addition to any payments made in conformance with the provisions in Section 90-1.01, "Description."
- No single Cleanness Value, Sand Equivalent or aggregate grading test shall represent more than 250 m^3 of concrete or one day's pour, whichever is smaller.
- When the source of an aggregate is changed, the Contractor shall adjust the mix proportions and submit in writing to the Engineer a copy of the mix design before using the aggregates.

90-2.02A Coarse Aggregate

- Coarse aggregate shall consist of gravel, crushed gravel, crushed rock, crushed air-cooled iron blast furnace slag or combinations thereof. Crushed air-cooled blast furnace slag shall not be used in reinforced or prestressed concrete.
- Coarse aggregate shall conform to the following quality requirements:

Tests	California Test	Requirements
Loss in Los Angeles Rattler (after 500 revolutions)	211	45% max.
Cleanness Value		
Operating Range	227	75 min.
Contract Compliance	227	71 min.

- In lieu of the above Cleanness Value requirements, a Cleanness Value "Operating Range" limit of 71, minimum, and a Cleanness Value "Contract Compliance" limit of 68, minimum, will be used to determine the acceptability of the coarse aggregate if the Contractor furnishes a Certificate of Compliance, as provided in Section 6-1.07, "Certificates of Compliance," certifying that:

1. coarse aggregate sampled at the completion of processing at the aggregate production plant had a Cleanness Value of not less than 82 when tested by California Test 227; and
2. prequalification tests performed in conformance with the requirements in California Test 549 indicated that the aggregate would develop a relative strength of not less than 95 percent and would have a relative shrinkage not greater than 105 percent, based on concrete.

90-2.02B Fine Aggregate

- Fine aggregate shall consist of natural sand, manufactured sand produced from larger aggregate or a combination thereof. Manufactured sand shall be well graded.

- Fine aggregate shall conform to the following quality requirements:

Test	California Test	Requirements
Organic Impurities	213	Satisfactory[a]
Mortar Strengths Relative to Ottawa Sand	515	95%, min.
Sand Equivalent:		
Operating Range	217	75, min.
Contract Compliance	217	71, min.

a Fine aggregate developing a color darker than the reference standard color solution may be accepted if it is determined by the Engineer, from mortar strength tests, that a darker color is acceptable.

- In lieu of the above Sand Equivalent requirements, a Sand Equivalent "Operating Range" limit of 71 minimum and a Sand Equivalent "Contract Compliance" limit of 68 minimum will be used to determine the acceptability of the fine aggregate if the Contractor furnishes a Certificate of Compliance, as provided in Section 6-1.07, "Certificates of Compliance," certifying that:

1. fine aggregate sampled at the completion of processing at the aggregate production plant had a Sand Equivalent value of not less than 82 when tested by California Test 217; and
2. prequalification tests performed in conformance with California Test 549 indicated that the aggregate would develop a relative strength of not less than 95 percent and would have a relative shrinkage not greater than 105 percent, based on concrete.

90-2.03 WATER

- In conventionally reinforced concrete work, the water for curing, for washing aggregates, and for mixing shall be free from oil and shall not contain more than 1000 parts per million of chlorides as Cl, when tested in conformance with California Test 422, nor more than 1300 parts per million of sulfates as SO_4, when tested in conformance with California Test 417. In prestressed concrete work, the water for curing, for washing aggregates, and for mixing shall be free from oil and shall not contain more than 650 parts per million of chlorides as Cl, when tested in conformance with California Test 422, nor more than 1300 parts per million of sulfates as SO_4, when tested in conformance with California Test 417. In no case shall the water contain an amount of impurities that will cause either: 1) a change in the setting time of cement of more than 25 percent when tested in conformance with the requirements in ASTM Designation: C 191 or ASTM Designation: C 266 or 2) a reduction in the compressive strength of mortar at 14 days of more than 5 percent, when tested in conformance with the requirements in ASTM Designation: C 109, when compared to the results obtained with distilled water or deionized water, tested in conformance with the requirements in ASTM Designation: C 109.
- In non-reinforced concrete work, the water for curing, for washing aggregates and for mixing shall be free from oil and shall not contain more than 2000 parts per million of chlorides as Cl, when tested in conformance with California Test 422, or more than 1500 parts per million of sulfates as SO_4, when tested in conformance with California Test 417.
- In addition to the above provisions, water for curing concrete shall not contain impurities in a sufficient amount to cause discoloration of the concrete or produce etching of the surface.
- Water reclaimed from mixer wash-out operations may be used in mixing concrete. The water shall not contain coloring agents or more than 300 parts per million of alkalis ($Na_2O + 0.658\ K_2O$) as determined on the filtrate. The specific gravity of the water shall not exceed 1.03 and shall not vary more than ±0.010 during a day's operations.

90-2.04 ADMIXTURE MATERIALS

- Admixture materials shall conform to the requirements in the following ASTM Designations:

A. Chemical Admixtures—ASTM Designation: C 494.
B. Air-entraining Admixtures—ASTM Designation: C 260.
C. Calcium Chloride—ASTM Designation: D 98.
D. Mineral Admixtures—Coal fly ash; raw or calcined natural pozzolan as specified in ASTM Designation: C 618; silica fume conforming to the requirements in ASTM Designation: C 1240, with reduction of mortar expansion of 80 percent, minimum, using the cement from the proposed mix design.

• Unless otherwise specified in the special provisions, mineral admixtures shall be used in conformance with the provisions in Section 90-4.08, "Required Use of Mineral Admixtures."

90-3 AGGREGATE GRADINGS

90-3.01 GENERAL

• Before beginning concrete work, the Contractor shall submit in writing to the Engineer the gradation of the primary aggregate nominal sizes that the Contractor proposes to furnish. If a primary coarse aggregate or the fine aggregate is separated into 2 or more sizes, the proposed gradation shall consist of the gradation for each individual size, and the proposed proportions of each individual size, combined mathematically to indicate one proposed gradation. The proposed gradation shall meet the grading requirements shown in the table in this section, and shall show the percentage passing each of the sieve sizes used in determining the end result.

• The Engineer may waive, in writing, the gradation requirements in this Section 90-3.01 and in Sections 90-3.02, "Coarse Aggregate Grading," 90-3.03, "Fine Aggregate Grading," and 90-3.04, "Combined Aggregate Gradings," if, in the Engineer's opinion, furnishing the gradation is not necessary for the type or amount of concrete work to be constructed.

• Gradations proposed by the Contractor shall be within the following percentage passing limits:

Primary Aggregate Nominal Size	Sieve Size	Limits of Proposed Gradation
37.5-mm x 19-mm	25-mm	19 - 41
25-mm x 4.75-mm	19-mm	52 - 85
25-mm x 4.75-mm	9.5-mm	15 - 38
12.5-mm x 4.75-mm	9.5-mm	40 - 78
9.5-mm x 2.36-mm	9.5-mm	50 - 85
Fine Aggregate	1.18-mm	55 - 75
Fine Aggregate	600-µm	34 - 46
Fine Aggregate	300-µm	16 - 29

• Should the Contractor change the source of supply, the Contractor shall submit in writing to the Engineer the new gradations before their intended use.

90-3.02 COARSE AGGREGATE GRADING

• The grading requirements for coarse aggregates are shown in the following table for each size of coarse aggregate:

Sieve Sizes	Percentage Passing Primary Aggregate Nominal Sizes							
	37.5-mm x 19-mm		25-mm x 4.75-mm		12.5-mm x 4.75-mm		9.5-mm x 2.36-mm	
	Operating Range	Contract Compliance	Operating Range	Contract Compliance	Operating Range	Contract Compliance	Operating Range	Contract Compliance
50-mm	100	100	—	—	—	—	—	—
37.5-mm	88-100	85-100	100	100	—	—	—	—
25-mm	x ± 18	X ± 25	88-100	86-100	—	—	—	—
19-mm	0-17	0-20	X ± 15	X ± 22	100	100	—	—
12.5-mm	—	—	—	—	82-100	80-100	100	100
9.5-mm	0-7	0-9	X ± 15	X ± 22	X ± 15	X ± 22	X ± 15	X ± 20
4.75-mm	—	—	0-16	0-18	0-15	0-18	0-25	0-28
2.36-mm	—	—	0-6	0-7	0-6	0-7	0-6	0-7

- In the above table, the symbol X is the gradation that the Contractor proposes to furnish for the specific sieve size as provided in Section 90-3.01, "General."
- Coarse aggregate for the 37.5-mm, maximum, combined aggregate grading as provided in Section 90-3.04, "Combined Aggregate Gradings," shall be furnished in 2 or more primary aggregate nominal sizes. Each primary aggregate nominal size may be separated into 2 sizes and stored separately, provided that the combined material conforms to the grading requirements for that particular primary aggregate nominal size.
- When the 25-mm, maximum, combined aggregate grading as provided in Section 90-3.04, "Combined Aggregate Gradings," is to be used, the coarse aggregate may be separated into 2 sizes and stored separately, provided that the combined material shall conform to the grading requirements for the 25-mm x 4.75-mm primary aggregate nominal size.

90-3.03 FINE AGGREGATE GRADING

- Fine aggregate shall be graded within the following limits:

Sieve Sizes	Percentage Passing	
	Operating Range	Contract Compliance
9.5-mm	100	100
4.75-mm	95-100	93-100
2.36-mm	65-95	61-99
1.18-mm	X ± 10	X ± 13
600-µm	X ± 9	X ± 12
300-µm	X ± 6	X ± 9
150-µm	2-12	1-15
75-µm	0-8	0-10

- In the above table, the symbol X is the gradation that the Contractor proposes to furnish for the specific sieve size as provided in Section 90-3.01, "General."
- In addition to the above required grading analysis, the distribution of the fine aggregate sizes shall be such that the difference between the total percentage passing the 1.18-mm sieve and the total percentage passing the 600-µm sieve shall be between 10 and 40, and the difference between the percentage passing the 600-µm and 300-µm sieves shall be between 10 and 40.
- Fine aggregate may be separated into 2 or more sizes and stored separately, provided that the combined material conforms to the grading requirements specified in this Section 90-3.03.

90-3.04 COMBINED AGGREGATE GRADINGS

• Combined aggregate grading limits shall be used only for the design of concrete mixes. Concrete mixes shall be designed so that aggregates are combined in proportions that shall produce a mixture within the grading limits for combined aggregates as specified herein. Within these limitations, the relative proportions shall be as ordered by the Engineer, except as otherwise provided in Section 90-1.01, "Description."

• The combined aggregate grading, except when otherwise specified in these specifications or the special provisions, shall be either the 37.5-mm, maximum grading, or the 25-mm, maximum grading, at the option of the Contractor.

Grading Limits of Combined Aggregates

Sieve Sizes	Percentage Passing			
	37.5-mm Max.	25-mm Max.	12.5-mm Max.	9.5-mm Max.
50-mm	100	—	—	—
37.5-mm	90-100	100	—	—
25-mm	50-86	90-100	—	—
19-mm	45-75	55-100	100	—
12.5-mm	—	—	90-100	100
9.5-mm	38-55	45-75	55-86	50 - 100
4.75-mm	30-45	35-60	45-63	45 - 63
2.36-mm	23-38	27-45	35-49	35 - 49
1.18-mm	17-33	20-35	25-37	25 - 37
600-µm	10-22	12-25	15-25	15 - 25
300-µm	4-10	5-15	5-15	5 - 15
150-µm	1-6	1-8	1-8	1 - 8
75-µm	0-3	0-4	0-4	0 - 4

• Changes from one grading to another shall not be made during the progress of the work unless permitted by the Engineer.

90-4 ADMIXTURES

90-4.01 GENERAL

• Admixtures used in portland cement concrete shall conform to and be used in conformance with the provisions in this Section 90-4 and the special provisions. Admixtures shall be used when specified or ordered by the Engineer and may be used at the Contractor's option as provided herein.

• Chemical admixtures and air-entraining admixtures containing chlorides as Cl in excess of one percent by mass of admixture, as determined by California Test 415, shall not be used in prestressed or reinforced concrete.

• Calcium chloride shall not be used in concrete except when otherwise specified.

• Mineral admixture used in concrete for exposed surfaces of like elements of a structure shall be from the same source and of the same percentage.

• Admixtures shall be uniform in properties throughout their use in the work. Should it be found that an admixture as furnished is not uniform in properties, its use shall be discontinued.

• If more than one admixture is used, the admixtures shall be compatible with each other so that the desirable effects of all admixtures used will be realized.

90-4.02 MATERIALS

• Admixture materials shall conform to the provisions in Section 90–2.04, "Admixture Materials."

90-4.03 ADMIXTURE APPROVAL

• No admixture brand shall be used in the work unless it is on the Department's current list of approved brands for the type of admixture involved.

• Admixture brands will be considered for addition to the approved list if the manufacturer of the admixture submits to the Transportation Laboratory a sample of the admixture accompanied by certified test results demonstrating that the admixture complies with the requirements in the appropriate ASTM Designation and these specifications. The sample shall be sufficient to permit performance of all required tests. Approval of admixture brands will be dependent upon a determination as to compliance with the requirements, based on the certified test results submitted, together with tests the Department may elect to perform.

• When the Contractor proposes to use an admixture of a brand and type on the current list of approved admixture brands, the Contractor shall furnish a Certificate of Compliance from the manufacturer, as provided in Section 6-1.07, "Certificates of Compliance," certifying that the admixture furnished is the same as that previously approved. If a previously approved admixture is not accompanied by a Certificate of Compliance, the admixture shall not be used in the work until the Engineer has had sufficient time to make the appropriate tests and has approved the admixture for use. The Engineer may take samples for testing at any time, whether or not the admixture has been accompanied by a Certificate of Compliance.

• If a mineral admixture is delivered directly to the site of the work, the Certificate of Compliance shall be signed by the manufacturer or supplier of the mineral admixture. If the mineral admixture is used in ready-mix concrete or in precast concrete products purchased as such by the Contractor, the Certificate of Compliance shall be signed by the manufacturer of the concrete or product.

90-4.04 REQUIRED USE OF CHEMICAL ADMIXTURES AND CALCIUM CHLORIDE

• When the use of a chemical admixture or calcium chloride is specified, the admixture shall be used at the dosage specified, except that if no dosage is specified, the admixture shall be used at the dosage normally recommended by the manufacturer of the admixture.

• Calcium chloride shall be dispensed in liquid, flake, or pellet form. Calcium chloride dispensed in liquid form shall conform to the provisions for dispensing liquid admixtures in Section 90-4.10, "Proportioning and Dispensing Liquid Admixtures."

90-4.05 OPTIONAL USE OF CHEMICAL ADMIXTURES

• The Contractor will be permitted to use Type A or F, water-reducing; Type B, retarding; or Type D or G, water-reducing and retarding admixtures as described in ASTM Designation: C 494 to conserve cementitious material or to facilitate any concrete construction application subject to the following conditions:

A. When a water-reducing admixture or a water-reducing and retarding admixture is used, the cementitious material content specified or ordered may be reduced by a maximum of 5 percent by mass, except that the resultant cementitious material content shall be not less than 300 kilograms per cubic meter; and
B. When a reduction in cementitious material content is made, the dosage of admixture used shall be the dosage used in determining approval of the admixture.

• Unless otherwise specified, a Type C accelerating chemical admixture conforming to the requirements in ASTM Designation: C 494, may be used in portland cement concrete. Inclusion in the mix design submitted for approval will not be required provided that the admixture is added to counteract changing conditions that contribute to delayed setting of the portland cement concrete, and the use or change in dosage of the admixture is approved in writing by the Engineer.

90-4.06 REQUIRED USE OF AIR-ENTRAINING ADMIXTURES

• When air-entrainment is specified or ordered by the Engineer, the air-entraining admixture shall be used in amounts to produce a concrete having the specified air content as determined by California Test 504.

90-4.07 OPTIONAL USE OF AIR-ENTRAINING ADMIXTURES

• When air-entrainment has not been specified or ordered by the Engineer, the Contractor will be permitted to use an air-entraining admixture to facilitate the use of any construction procedure or equipment provided that the average air content, as determined by California Test 504, of 3 successive tests does not exceed 4 percent, and no single test value exceeds 5.5 percent. If the Contractor elects to use an air-entraining admixture in concrete for pavement, the Contractor shall so indicate at the time the Contractor designates the source of aggregate as provided in Section 40-1.015, "Cement Content."

90-4.08 REQUIRED USE OF MINERAL ADMIXTURES

• Unless otherwise specified, mineral admixture shall be combined with cement to make cementitious material.

• The calcium oxide content of mineral admixtures shall not exceed 10 percent and the available alkali, as sodium oxide equivalent, shall not exceed 1.5 percent when determined in conformance with the requirements in ASTM Designation: C 618.

• The amounts of cement and mineral admixture used in cementitious material shall be sufficient to satisfy the minimum cementitious material content requirements specified in Section 90-1.01, "Description," or Section 90-4.05, "Optional Use of Chemical Admixtures," and shall conform to the following:

A. The minimum amount of cement shall not be less than 75 percent by mass of the specified minimum cementitious material content;
B. The minimum amount of mineral admixture to be combined with cement shall be determined using one of the following criteria:

    1. When the calcium oxide content of a mineral admixture is equal to or less than 2 percent by mass, the amount of mineral admixture shall not be less than 15 percent by mass of the total amount of cementitious material to be used in the mix;
    2. When the calcium oxide content of a mineral admixture is greater than 2 percent, the amount of mineral admixture shall not be less than 25 percent by mass of the total amount of cementitious material to be used in the mix;
    3. When a mineral admixture that conforms to the provisions for silica fume in Section 90-2.04, "Admixture Materials," is used, the amount of mineral admixture shall not be less than 10 percent by mass of the total amount of cementitious material to be used in the mix

C. The total amount of mineral admixture shall not exceed 35 percent by mass of the total amount of cementitious material to be used in the mix. Where Section 90-1.01, "Description," specifies a maximum cementitious content in kilograms per cubic meter, the total mass of cement and mineral admixture per cubic meter shall not exceed the specified maximum cementitious material content.

90-4.09 BLANK

90-4.10 PROPORTIONING AND DISPENSING LIQUID ADMIXTURES

- Chemical admixtures and air-entraining admixtures shall be dispensed in liquid form. Dispensers for liquid admixtures shall have sufficient capacity to measure at one time the prescribed quantity required for each batch of concrete. Each dispenser shall include a graduated measuring unit into which liquid admixtures are measured to within ±5 percent of the prescribed quantity for each batch. Dispensers shall be located and maintained so that the graduations can be accurately read from the point at which proportioning operations are controlled to permit a visual check of batching accuracy prior to discharge. Each measuring unit shall be clearly marked for the type and quantity of admixture.
- Each liquid admixture dispensing system shall be equipped with a sampling device consisting of a valve located in a safe and readily accessible position such that a sample of the admixture may be withdrawn slowly by the Engineer.
- If more than one liquid admixture is used in the concrete mix, each liquid admixture shall have a separate measuring unit and shall be dispensed by injecting equipment located in such a manner that the admixtures are not mixed at high concentrations and do not interfere with the effectiveness of each other. When air-entraining admixtures are used in conjunction with other liquid admixtures, the air-entraining admixture shall be the first to be incorporated into the mix.
- When automatic proportioning devices are required for concrete pavement, dispensers for liquid admixtures shall operate automatically with the batching control equipment. The dispensers shall be equipped with an automatic warning system in good operating condition that will provide a visible or audible signal at the point at which proportioning operations are controlled when the quantity of admixture measured for each batch of concrete varies from the preselected dosage by more than 5 percent, or when the entire contents of the measuring unit are not emptied from the dispenser into each batch of concrete.
- Unless liquid admixtures are added to premeasured water for the batch, their discharge into the batch shall be arranged to flow into the stream of water so that the admixtures are well dispersed throughout the batch, except that air-entraining admixtures may be dispensed directly into moist sand in the batching bins provided that adequate control of the air content of the concrete can be maintained.
- Liquid admixtures requiring dosages greater than 2.5 L/m^3 shall be considered to be water when determining the total amount of free water as specified in Section 90-6.06, "Amount of Water and Penetration."
- Special admixtures, such as "high range" water reducers that may contribute to a high rate of slump loss, shall be measured and dispensed as recommended by the admixture manufacturer and as approved by the Engineer.

90-4.11 STORAGE, PROPORTIONING, AND DISPENSING OF MINERAL ADMIXTURES

- Mineral admixtures shall be protected from exposure to moisture until used. Sacked material shall be piled to permit access for tally, inspection and identification for each shipment.
- Adequate facilities shall be provided to assure that mineral admixtures meeting the specified requirements are kept separate from other mineral admixtures in order to prevent any but the specified mineral admixtures from entering the work. Safe and suitable facilities for sampling mineral admixtures shall be provided at the weigh hopper or in the feed line immediately in advance of the hopper.
- Mineral admixtures shall be incorporated into concrete using equipment conforming to the requirements for cement weigh hoppers, and charging and discharging mechanisms in ASTM Designation: C 94, in Section 90-5.03, "Proportioning," and in this Section 90-4.11.
- When concrete is completely mixed in stationary paving mixers, the mineral admixture shall be weighed in a separate weigh hopper conforming to the provisions for cement weigh hoppers and charging and discharging mechanisms in Section 90-5.03A, "Proportioning for Pavement," and the mineral admixture and cement shall be introduced simultaneously into the mixer proportionately with the aggregate. If the mineral admixture is not weighed in a separate weigh hopper, the Contractor shall provide certification that the

stationary mixer is capable of mixing the cement, admixture, aggregates and water uniformly prior to discharge. Certification shall contain the following:

A. Test results for 2 compressive strength test cylinders of concrete taken within the first one-third and 2 compressive strength test cylinders of concrete taken within the last one-third of the concrete discharged from a single batch from the stationary paving mixer. Strength tests and cylinder preparation will be in conformance with the provisions of Section 90-9, "Compressive Strength;"
B. Calculations demonstrating that the difference in the averages of 2 compressive strengths taken in the first one-third is no greater than 7.5 percent different than the averages of 2 compressive strengths taken in the last one-third of the concrete discharged from a single batch from the stationary paving mixer. Strength tests and cylinder preparation will be in conformance with the provisions of Section 90-9, "Compressive Strength;" and
C. The mixer rotation speed and time of mixing prior to discharge that are required to produce a mix that meets the requirements above.

90-5 PROPORTIONING

90-5.01 STORAGE OF AGGREGATES

• Aggregates shall be stored or stockpiled in such a manner that separation of coarse and fine particles of each size shall be avoided and also that the various sizes shall not become intermixed before proportioning.

• Aggregates shall be stored or stockpiled and handled in a manner that shall prevent contamination by foreign materials. In addition, storage of aggregates at batching or mixing facilities that are erected subsequent to the award of the contract and that furnish concrete to the project shall conform to the following:

A. Intermingling of the different sizes of aggregates shall be positively prevented. The Contractor shall take the necessary measures to prevent intermingling. The preventive measures may include, but are not necessarily limited to, physical separation of stockpiles or construction of bulkheads of adequate length and height; and
B. Contamination of aggregates by contact with the ground shall be positively prevented. The Contractor shall take the necessary measures to prevent contamination. The preventive measures shall include, but are not necessarily limited to, placing aggregates on wooden platforms or on hardened surfaces consisting of portland cement concrete, asphalt concrete, or cement treated material.

• In placing aggregates in storage or in moving the aggregates from storage to the weigh hopper of the batching plant, any method that may cause segregation, degradation, or the combining of materials of different gradings that will result in any size of aggregate at the weigh hopper failing to meet the grading requirements, shall be discontinued. Any method of handling aggregates that results in excessive breakage of particles shall be discontinued. The use of suitable devices to reduce impact of falling aggregates may be required by the Engineer.

90-5.02 PROPORTIONING DEVICES

• Weighing, measuring, or metering devices used for proportioning materials shall conform to the requirements in Section 9-1.01, "Measurement of Quantities," and this Section 90-5.02. In addition, automatic weighing systems shall comply with the requirements for automatic proportioning devices in Section 90-5.03A, "Proportioning for Pavement." Automatic devices shall be automatic to the extent that the only manual operation required for proportioning the aggregates, cement, and mineral admixture for one batch of concrete is a single operation of a switch or starter.

- Proportioning devices shall be tested at the expense of the Contractor as frequently as the Engineer may deem necessary to ensure their accuracy.
- Weighing equipment shall be insulated against vibration or movement of other operating equipment in the plant. When the plant is in operation, the mass of each batch of material shall not vary from the mass designated by the Engineer by more than the tolerances specified herein.
- Equipment for cumulative weighing of aggregate shall have a zero tolerance of ±0.5 percent of the designated total batch mass of the aggregate. For systems with individual weigh hoppers for the various sizes of aggregate, the zero tolerance shall be ±0.5 percent of the individual batch mass designated for each size of aggregate. Equipment for cumulative weighing of cement and mineral admixtures shall have a zero tolerance of ±0.5 percent of the designated total batch mass of the cement and mineral admixture. Equipment for weighing cement or mineral admixture separately shall have a zero tolerance of ±0.5 percent of their designated individual batch masses. Equipment for measuring water shall have a zero tolerance of ±0.5 percent of its designated mass or volume.
- The mass indicated for any batch of material shall not vary from the preselected scale setting by more than the following:

A. Aggregate weighed cumulatively shall be within 1.0 percent of the designated total batch mass of the aggregate. Aggregates weighed individually shall be within 1.5 percent of their respective designated batch masses; and
B. Cement shall be within 1.0 percent of its designated batch mass. When weighed individually, mineral admixture shall be within 1.0 percent of its designated batch mass. When mineral admixture and cement are permitted to be weighed cumulatively, cement shall be weighed first to within 1.0 percent of its designated batch mass, and the total for cement and mineral admixture shall be within 1.0 percent of the sum of their designated batch masses; and
C. Water shall be within 1.5 percent of its designated mass or volume.

- Each scale graduation shall be approximately 0.001 of the total capacity of the scale. The capacity of scales for weighing cement, mineral admixture, or cement plus mineral admixture and aggregates shall not exceed that of commercially available scales having single graduations indicating a mass not exceeding the maximum permissible mass variation above, except that no scale shall be required having a capacity of less than 500 kg, with 0.5-kg graduations.

90-5.03 PROPORTIONING

- Proportioning shall consist of dividing the aggregates into the specified sizes, each stored in a separate bin, and combining them with cement, mineral admixture, and water as provided in these specifications. Aggregates shall be proportioned by mass.
- At the time of batching, aggregates shall have been dried or drained sufficiently to result in a stable moisture content such that no visible separation of water from aggregate will take place during transportation from the proportioning plant to the point of mixing. In no event shall the free moisture content of the fine aggregate at the time of batching exceed 8 percent of its saturated, surface-dry mass.
- Should separate supplies of aggregate material of the same size group, but of different moisture content or specific gravity or surface characteristics affecting workability, be available at the proportioning plant, withdrawals shall be made from one supply exclusively and the materials therein completely exhausted before starting upon another.
- Bulk "Type IP (MS) Modified" cement shall be weighed in an individual hopper and shall be kept separate from the aggregates until the ingredients are released for discharge into the mixer.

- Bulk cement and mineral admixture may be weighed in separate, individual weigh hoppers or may be weighed in the same weigh hopper and shall be kept separate from the aggregates until the ingredients are released for discharge into the mixer. If the cement and mineral admixture are weighed cumulatively, the cement shall be weighed first.
- When cement and mineral admixtures are weighed in separate weigh hoppers**,** the weigh systems for the proportioning of the aggregate, the cement, and the mineral admixture shall be individual and distinct from all other weigh systems. Each weigh system shall be equipped with a hopper, a lever system, and an indicator to constitute an individual and independent material weighing device. The cement and the mineral admixture shall be discharged into the mixer simultaneously with the aggregate.
- The scales and weigh hoppers for bulk weighing cement, mineral admixture, or cement plus mineral admixture shall be separate and distinct from the aggregate weighing equipment.
- For batches with a volume of one cubic meter or more, the batching equipment shall conform to one of the following combinations:

A. Separate boxes and separate scale and indicator for weighing each size of aggregate.
B. Single box and scale indicator for all aggregates.
C. Single box or separate boxes and automatic weighing mechanism for all aggregates.

- In order to check the accuracy of batch masses, the gross mass and tare mass of batch trucks, truck mixers, truck agitators, and non-agitating hauling equipment shall be determined when ordered by the Engineer. The equipment shall be weighed at the Contractor's expense on scales designated by the Engineer.

90-5.03A Proportioning for Pavement

- Aggregates and bulk cement, mineral admixture, and cement plus mineral admixture for use in pavement shall be proportioned by mass by means of automatic proportioning devices of approved type conforming to these specifications.
- The Contractor shall install and maintain in operating condition an electronically actuated moisture meter that will indicate, on a readily visible scale, changes in the moisture content of the fine aggregate as it is batched within a sensitivity of 0.5 percent by mass of the fine aggregate.
- The batching of cement, mineral admixture, or cement plus mineral admixture and aggregate shall be interlocked so that a new batch cannot be started until all weigh hoppers are empty, the proportioning devices are within zero tolerance, and the discharge gates are closed. The interlock shall permit no part of the batch to be discharged until all aggregate hoppers and the cement and mineral admixture hoppers or the cement plus mineral admixture hopper are charged with masses that are within the tolerances specified in Section 90-5.02, "Proportioning Devices."
- When interlocks are required for cement and mineral admixture charging mechanisms and cement and mineral admixtures are weighed cumulatively, their charging mechanisms shall be interlocked to prevent the introduction of mineral admixture until the mass of cement in the cement weigh hopper is within the tolerances specified in Section 90-5.02, "Proportioning Devices."
- The discharge gate on the cement and mineral admixture hoppers or the cement plus mineral admixture hopper shall be designed to permit regulating the flow of cement, mineral admixture, or cement plus mineral admixture into the aggregate as directed by the Engineer.
- When separate weigh boxes are used for each size of aggregate, the discharge gates shall permit regulating the flow of each size of aggregate as directed by the Engineer.
- Material discharged from the several bins shall be controlled by gates or by mechanical conveyors. The means of withdrawal from the several bins, and of discharge from the weigh box, shall be interlocked so that not more than one bin can discharge at a time, and so that the weigh box cannot be tripped until the required

quantity from each of the several bins has been deposited therein. Should a separate weigh box be used for each size of aggregate, all may be operated and discharged simultaneously.

- When the discharge from the several bins is controlled by gates, each gate shall be actuated automatically so that the required mass is discharged into the weigh box, after which the gate shall automatically close and lock.
- The automatic weighing system shall be designed so that all proportions required may be set on the weighing controller at the same time.

90-6 MIXING AND TRANSPORTING

90-6.01 GENERAL

- Concrete shall be mixed in mechanically operated mixers, except that when permitted by the Engineer, batches not exceeding 0.25 m^3 may be mixed by hand methods in conformance with the provisions in Section 90-6.05, "Hand-Mixing."
- Equipment having components made of aluminum or magnesium alloys that would have contact with plastic concrete during mixing, transporting, or pumping of portland cement concrete shall not be used.
- Concrete shall be homogeneous and thoroughly mixed, and there shall be no lumps or evidence of undispersed cement, mineral admixture, or cement plus mineral admixture.
- Uniformity of concrete mixtures will be determined by differences in penetration as determined by California Test 533, or slump as determined by ASTM Designation: C 143, and by variations in the proportion of coarse aggregate as determined by California Test 529.
- When the mix design specifies a penetration value, the difference in penetration, determined by comparing penetration tests on 2 samples of mixed concrete from the same batch or truck mixer load, shall not exceed 10 mm. When the mix design specifies a slump value, the difference in slump, determined by comparing slump tests on 2 samples of mixed concrete from the same batch or truck mixer load, shall not exceed the values given in the table below. Variation in the proportion of coarse aggregate will be determined by comparing the results of tests of 2 samples of mixed concrete from the same batch or truck mixer load and the difference between the 2 results shall not exceed 100 kg per cubic meter of concrete.

Average Slump	Maximum Permissible Difference
Less than 100-mm	25-mm
100-mm to 150-mm	38-mm
Greater than 150-mm to 225-mm	50-mm

- The Contractor, at the Contractor's expense, shall furnish samples of the freshly mixed concrete and provide satisfactory facilities for obtaining the samples.

90-6.02 MACHINE MIXING

- Concrete mixers may be of the revolving drum or the revolving blade type, and the mixing drum or blades shall be operated uniformly at the mixing speed recommended by the manufacturer. Mixers and agitators that have an accumulation of hard concrete or mortar shall not be used.
- The temperature of mixed concrete, immediately before placing, shall be not less than 10°C or more than 32°C. Aggregates and water shall be heated or cooled as necessary to produce concrete within these temperature limits. Neither aggregates nor mixing water shall be heated to exceed 65°C. If ice is used to cool the concrete, discharge of the mixer will not be permitted until all ice is melted.

- The batch shall be so charged into the mixer that some water will enter in advance of cementitious materials and aggregates. All water shall be in the drum by the end of the first one-fourth of the specified mixing time.
- Cementitious materials shall be batched and charged into the mixer by means that will not result either in loss of cementitious materials due to the effect of wind, in accumulation of cementitious materials on surfaces of conveyors or hoppers, or in other conditions that reduce or vary the required quantity of cementitious material in the concrete mixture.
- Paving and stationary mixers shall be operated with an automatic timing device. The timing device and discharge mechanism shall be interlocked so that during normal operation no part of the batch will be discharged until the specified mixing time has elapsed.
- The total elapsed time between the intermingling of damp aggregates and all cementitious materials and the start of mixing shall not exceed 30 minutes.
- The size of batch shall not exceed the manufacturer's guaranteed capacity.
- When producing concrete for pavement or base, suitable batch counters shall be installed and maintained in good operating condition at jobsite batching plants and stationary mixers. The batch counters shall indicate the exact number of batches proportioned and mixed.
- Concrete shall be mixed and delivered to the jobsite by means of one of the following combinations of operations:

A. Mixed completely in a stationary mixer and the mixed concrete transported to the point of delivery in truck agitators or in non-agitating hauling equipment (central-mixed concrete).
B. Mixed partially in a stationary mixer, and the mixing completed in a truck mixer (shrink-mixed concrete).
C. Mixed completely in a truck mixer (transit-mixed concrete).
D. Mixed completely in a paving mixer.

- Agitators may be truck mixers operating at agitating speed or truck agitators. Each mixer and agitator shall have attached thereto in a prominent place a metal plate or plates on which is plainly marked the various uses for which the equipment is designed, the manufacturer's guaranteed capacity of the drum or container in terms of the volume of mixed concrete and the speed of rotation of the mixing drum or blades.
- Truck mixers shall be equipped with electrically or mechanically actuated revolution counters by which the number of revolutions of the drum or blades may readily be verified.
- When shrink-mixed concrete is furnished, concrete that has been partially mixed at a central plant shall be transferred to a truck mixer and all requirements for transit-mixed concrete shall apply. No credit in the number of revolutions at mixing speed shall be allowed for partial mixing in a central plant.

90-6.03 TRANSPORTING MIXED CONCRETE

- Mixed concrete may be transported to the delivery point in truck agitators or truck mixers operating at the speed designated by the manufacturer of the equipment as agitating speed, or in non-agitating hauling equipment, provided the consistency and workability of the mixed concrete upon discharge at the delivery point is suitable for adequate placement and consolidation in place, and provided the mixed concrete after hauling to the delivery point conforms to the provisions in Section 90-6.01, "General."
- Truck agitators shall be loaded not to exceed the manufacturer's guaranteed capacity and shall maintain the mixed concrete in a thoroughly mixed and uniform mass during hauling.
- Bodies of non-agitating hauling equipment shall be constructed so that leakage of the concrete mix, or any part thereof, will not occur at any time.

- Concrete hauled in open-top vehicles shall be protected during hauling against rain or against exposure to the sun for more than 20 minutes when the ambient temperature exceeds 24°C.
- No additional mixing water shall be incorporated into the concrete during hauling or after arrival at the delivery point, unless authorized by the Engineer. If the Engineer authorizes additional water to be incorporated into the concrete, the drum shall be revolved not less than 30 revolutions at mixing speed after the water is added and before discharge is commenced.
- The rate of discharge of mixed concrete from truck mixer-agitators shall be controlled by the speed of rotation of the drum in the discharge direction with the discharge gate fully open.
- When a truck mixer or agitator is used for transporting concrete to the delivery point, discharge shall be completed within 1.5 hours or before 250 revolutions of the drum or blades, whichever occurs first, after the introduction of the cement to the aggregates. Under conditions contributing to quick stiffening of the concrete, or when the temperature of the concrete is 30°C or above, the time allowed may be less than 1.5 hours.
- When non-agitating hauling equipment is used for transporting concrete to the delivery point, discharge shall be completed within one hour after the addition of the cement to the aggregates. Under conditions contributing to quick stiffening of the concrete, or when the temperature of the concrete is 30°C or above, the time between the introduction of cement to the aggregates and discharge shall not exceed 45 minutes.
- Each load of concrete delivered at the jobsite shall be accompanied by a weighmaster certificate showing the mix identification number, non-repeating load number, date and time at which the materials were batched, the total amount of water added to the load, and for transit-mixed concrete, the reading of the revolution counter at the time the truck mixer is charged with cement. This weighmaster certificate shall also show the actual scale masses (kilograms) for the ingredients batched. Theoretical or target batch masses shall not be used as a substitute for actual scale masses.
- Weighmaster certificates shall be provided in printed form, or if approved by the Engineer, the data may be submitted in electronic media. Electronic media shall be presented in a tab-delimited format on a 90 mm diskette with a capacity of at least 1.4 megabytes. Captured data, for the ingredients represented by each batch shall be "line feed, carriage return" (LFCR) and "one line, separate record" with allowances for sufficient fields to satisfy the amount of data required by these specifications.
- The Contractor may furnish a weighmaster certificate accompanied by a separate certificate that lists the actual batch masses or measurements for a load of concrete provided that both certificates are imprinted with the same non-repeating load number that is unique to the contract and delivered to the jobsite with the load.
- Weighmaster certificates furnished by the Contractor shall conform to the provisions in Section 9-1.01, "Measurement of Quantities."

90-6.04 TIME OR AMOUNT OF MIXING

- Mixing of concrete in paving or stationary mixers shall continue for the required mixing time after all ingredients, except water and admixture, if added with the water, are in the mixing compartment of the mixer before any part of the batch is released. Transfer time in multiple drum mixers shall not be counted as part of the required mixing time.
- The required mixing time, in paving or stationary mixers, of concrete used for concrete structures, except minor structures, shall be not less than 90 seconds or more than 5 minutes, except that when directed by the Engineer in writing, the requirements of the following paragraph shall apply.
- The required mixing time, in paving or stationary mixers, except as provided in the preceding paragraph, shall be not less than 50 seconds or more than 5 minutes.
- The minimum required revolutions at the mixing speed for transit-mixed concrete shall not be less than that recommended by the mixer manufacturer, but in no case shall the number of revolutions be less than that required to consistently produce concrete conforming to the provisions for uniformity in Section 90-6.01, "General."

90-6.05 HAND-MIXING

• Hand-mixed concrete shall be made in batches of not more than 0.25 m^3 and shall be mixed on a watertight, level platform. The proper amount of coarse aggregate shall be measured in measuring boxes and spread on the platform and the fine aggregate shall be spread on this layer, the 2 layers being not more than 0.3 meters in total depth. On this mixture shall be spread the dry cement and mineral admixture and the whole mass turned no fewer than 2 times dry; then sufficient clean water shall be added, evenly distributed, and the whole mass again turned no fewer than 3 times, not including placing in the carriers or forms.

90-6.06 AMOUNT OF WATER AND PENETRATION

• The amount of water used in concrete mixes shall be regulated so that the penetration of the concrete as determined by California Test 533 or the slump of the concrete as determined by ASTM Designation: C 143 is within the "Nominal" values shown in the following table. When the penetration or slump of the concrete is found to exceed the nominal values listed, the mixture of subsequent batches shall be adjusted to reduce the penetration or slump to a value within the nominal range shown. Batches of concrete with a penetration or slump exceeding the maximum values listed shall not be used in the work. When Type F or Type G chemical admixtures are added to the mix, the penetration requirements shall not apply and the slump shall not exceed 225 mm after the chemical admixtures are added.

Type of Work	Nominal		Maximum	
	Penetration (mm)	Slump (mm)	Penetration (mm)	Slump (mm)
Concrete Pavement	0-25	—	40	—
Non-reinforced concrete facilities	0-35	—	50	—
Reinforced concrete structures				
Sections over 300-mm thick	0-35	—	65	—
Sections 300-mm thick or less	0-50	—	75	—
Concrete placed under water	—	150-200	—	225
Cast-in-place concrete piles	65-90	130-180	100	200

• The amount of free water used in concrete shall not exceed 183 kg/m^3, plus 20 kg for each required 100 kg of cementitious material in excess of 325 kg/m^3.

• The term free water is defined as the total water in the mixture minus the water absorbed by the aggregates in reaching a saturated surface-dry condition.

• Where there are adverse or difficult conditions that affect the placing of concrete, the above specified penetration and free water content limitations may be exceeded providing the Contractor is granted permission by the Engineer in writing to increase the cementitious material content per cubic meter of concrete. The increase in water and cementitious material shall be at a ratio not to exceed 30 kg of water per added 100 kg of cementitious material per cubic meter. The cost of additional cementitious material and water added under these conditions shall be at the Contractor's expense and no additional compensation will be allowed therefor.

• The equipment for supplying water to the mixer shall be constructed and arranged so that the amount of water added can be measured accurately. Any method of discharging water into the mixer for a batch shall be accurate within 1.5 percent of the quantity of water required to be added to the mix for any position of the mixer. Tanks used to measure water shall be designed so that water cannot enter while water is being discharged into the mixer and discharge into the mixer shall be made rapidly in one operation without dribbling. All equipment shall be arranged so as to permit checking the amount of water delivered by discharging into measured containers.

90-7 CURING CONCRETE

90-7.01 METHODS OF CURING

- Newly placed concrete shall be cured by the methods specified in this Section 90-7.01 and the special provisions.

90-7.01A Water Method

- The concrete shall be kept continuously wet by the application of water for a minimum curing period of 7 days after the concrete has been placed.
- When a curing medium consisting of cotton mats, rugs, carpets, or earth or sand blankets is to be used to retain the moisture, the entire surface of the concrete shall be kept damp by applying water with a nozzle that so atomizes the flow that a mist and not a spray is formed, until the surface of the concrete is covered with the curing medium. The moisture from the nozzle shall not be applied under pressure directly upon the concrete and shall not be allowed to accumulate on the concrete in a quantity sufficient to cause a flow or wash the surface. At the expiration of the curing period, the concrete surfaces shall be cleared of all curing mediums.
- When concrete bridge decks and flat slabs are to be cured without the use of a curing medium, the entire surface of the bridge deck or slab shall be kept damp by the application of water with an atomizing nozzle as specified in the preceding paragraph, until the concrete has set, after which the entire surface of the concrete shall be sprinkled continuously with water for a period of not less than 7 days.

90-7.01B Curing Compound Method

- Surfaces of the concrete that are exposed to the air shall be sprayed uniformly with a curing compound.
- Curing compounds to be used shall be as follows:

1. Pigmented curing compound conforming to the requirements in ASTM Designation: C 309, Type 2, Class B, except the resin type shall be poly-alpha-methylstyrene.
2. Pigmented curing compound conforming to the requirements in ASTM Designation: C 309, Type 2, Class B.
3. Pigmented curing compound conforming to the requirements in ASTM Designation: C 309, Type 2, Class A.
4. Non-pigmented curing compound conforming to the requirements in ASTM Designation: C 309, Type 1, Class B.
5. Non-pigmented curing compound conforming to the requirements in ASTM Designation: C 309, Type 1, Class A.
6. Non-pigmented curing compound with fugitive dye conforming to the requirements in ASTM Designation: C 309, Type 1-D, Class A.

- The infrared scan for the dried vehicle from curing compound (1) shall match the infrared scan on file at the Transportation Laboratory.
- The loss of water for each type of curing compound, when tested in conformance with the requirements in California Test 534, shall not be more than 0.15-kg/m^2 in 24 hours.
- The curing compound to be used will be specified elsewhere in these specifications or in the special provisions.
- When the use of curing compound is required or permitted elsewhere in these specifications or in the special provisions and no specific kind is specified, any of the curing compounds listed above may be used.
- Curing compound shall be applied at a nominal rate of 3.7 m^2/L, unless otherwise specified.

- At any point, the application rate shall be within ±1.2 m^2/L of the nominal rate specified, and the average application rate shall be within ±0.5 m^2/L of the nominal rate specified when tested in conformance with the requirements in California Test 535. Runs, sags, thin areas, skips, or holidays in the applied curing compound shall be evidence that the application is not satisfactory.
- Curing compounds shall be applied using power operated spray equipment. The power operated spraying equipment shall be equipped with an operational pressure gage and a means of controlling the pressure. Hand spraying of small and irregular areas that are not reasonably accessible to mechanical spraying equipment, in the opinion of the Engineer, may be permitted.
- The curing compound shall be applied to the concrete following the surface finishing operation, immediately before the moisture sheen disappears from the surface, but before any drying shrinkage or craze cracks begin to appear. In the event of any drying or cracking of the surface, application of water with an atomizing nozzle as specified in Section 90-7.01A, "Water Method," shall be started immediately and shall be continued until application of the compound is resumed or started; however, the compound shall not be applied over any resulting freestanding water. Should the film of compound be damaged from any cause before the expiration of 7 days after the concrete is placed in the case of structures and 72 hours in the case of pavement, the damaged portion shall be repaired immediately with additional compound.
- At the time of use, compounds containing pigments shall be in a thoroughly mixed condition with the pigment uniformly dispersed throughout the vehicle. A paddle shall be used to loosen all settled pigment from the bottom of the container, and a power driven agitator shall be used to disperse the pigment uniformly throughout the vehicle.
- Agitation shall not introduce air or other foreign substance into the curing compound.
- The manufacturer shall include in the curing compound the necessary additives for control of sagging, pigment settling, leveling, de-emulsification, or other requisite qualities of a satisfactory working material. Pigmented curing compounds shall be manufactured so that the pigment does not settle badly, does not cake or thicken in the container, and does not become granular or curdled. Settlement of pigment shall be a thoroughly wetted, soft, mushy mass permitting the complete and easy vertical penetration of a paddle. Settled pigment shall be easily redispersed, with minimum resistance to the sideways manual motion of the paddle across the bottom of the container, to form a smooth uniform product of the proper consistency.
- Curing compounds shall remain sprayable at temperatures above 4°C and shall not be diluted or altered after manufacture.
- The curing compound shall be packaged in clean 1040-L totes, 210-L barrels

or 19-L pails shall be supplied from a suitable storage tank located at the jobsite. The containers shall comply with "Title 49, Code of Federal Regulations, Hazardous Materials Regulations." The 1040-L totes and the 210-L barrels shall have removable lids and airtight fasteners. The 19-L pails shall be round and have standard full open head and bail. Lids with bungholes shall not be permitted. Settling or separation of solids in containers, except tanks, must be completely redispersed with low speed mixing prior to use, in conformance with these specifications and the manufacturer's recommendations. Mixing shall be accomplished either manually by use of a paddle or by use of a mixing blade driven by a drill motor, at low speed. Mixing blades shall be the type used for mixing paint. On site storage tanks shall be kept clean and free of contaminants. Each tank shall have a permanent system designed to completely redisperse settled material without introducing air or other foreign substances.

- Steel containers and lids shall be lined with a coating that will prevent destructive action by the compound or chemical agents in the air space above the compound. The coating shall not come off the container or lid as skins. Containers shall be filled in a manner that will prevent skinning. Plastic containers shall not react with the compound.
- Each container shall be labeled with the manufacturer's name, kind of curing compound, batch number, volume, date of manufacture, and volatile organic compound (VOC) content. The label shall also warn that the

curing compound containing pigment shall be well stirred before use. Precautions concerning the handling and the application of curing compound shall be shown on the label of the curing compound containers in conformance with the Construction Safety Orders and General Industry Safety Orders of the State of California.

- Containers of curing compound shall be labeled to indicate that the contents fully comply with the rules and regulations concerning air pollution control in the State of California.
- When the curing compound is shipped in tanks or tank trucks, a shipping invoice shall accompany each load. The invoice shall contain the same information as that required herein for container labels.
- Curing compound will be sampled by the Engineer at the source of supply or at the jobsite or at both locations.
- Curing compound shall be formulated so as to maintain the specified properties for a minimum of one year. The Engineer may require additional testing before use to determine compliance with these specifications if the compound has not been used within one year or whenever the Engineer has reason to believe the compound is no longer satisfactory.
- Tests will be conducted in conformance with the latest ASTM test methods and methods in use by the Transportation Laboratory.

90-7.01C Waterproof Membrane Method

- The exposed finished surfaces of concrete shall be sprayed with water, using a nozzle that so atomizes the flow that a mist and not a spray is formed, until the concrete has set, after which the curing membrane shall be placed. The curing membrane shall remain in place for a period of not less than 72 hours.
- Sheeting material for curing concrete shall conform to the requirements in AASHTO Designation: M 171 for white reflective materials.
- The sheeting material shall be fabricated into sheets of such width as to provide a complete cover for the entire concrete surface. Joints in the sheets shall be securely cemented together in such a manner as to provide a waterproof joint. The joint seams shall have a minimum lap of 100 mm.
- The sheets shall be securely weighted down by placing a bank of earth on the edges of the sheets or by other means satisfactory to the Engineer.
- Should any portion of the sheets be broken or damaged before the expiration of 72 hours after being placed, the broken or damaged portions shall be immediately repaired with new sheets properly cemented into place.
- Sections of membrane that have lost their waterproof qualities or have been damaged to such an extent as to render them unfit for curing the concrete shall not be used.

90-7.01D Forms-In-Place Method

- Formed surfaces of concrete may be cured by retaining the forms in place. The forms shall remain in place for a minimum period of 7 days after the concrete has been placed, except that for members over 0.5-m in least dimension the forms shall remain in place for a minimum period of 5 days.
- Joints in the forms and the joints between the end of forms and concrete shall be kept moisture tight during the curing period. Cracks in the forms and cracks between the forms and the concrete shall be resealed by methods subject to the approval of the Engineer.

90-7.02 CURING PAVEMENT

- The entire exposed area of the pavement, including edges, shall be cured by the waterproof membrane method, or curing compound method using curing compound (1) or (2) as the Contractor may elect. Should the side forms be removed before the expiration of 72 hours following the start of curing, the exposed pavement edges shall also be cured. If the pavement is cured by means of the curing compound method, the sawcut and

all portions of the curing compound that have been disturbed by sawing operations shall be restored by spraying with additional curing compound.

• Curing shall commence as soon as the finishing process provided in Section 40-1.10, "Final Finishing," has been completed. The method selected shall conform to the provisions in Section 90-7.01, "Methods of Curing."

• When the curing compound method is used, the compound shall be applied to the entire pavement surface by mechanical sprayers. Spraying equipment shall be of the fully atomizing type equipped with a tank agitator that provides for continual agitation of the curing compound during the time of application. The spray shall be adequately protected against wind, and the nozzles shall be so oriented or moved mechanically transversely as to result in the minimum specified rate of coverage being applied uniformly on exposed faces. Hand spraying of small and irregular areas, and areas inaccessible to mechanical spraying equipment, in the opinion of the Engineer, will be permitted. When the ambient air temperature is above 15°C, the Contractor shall fog the surface of the concrete with a fine spray of water as specified in Section 90-7.01A, "Water Method." The surface of the pavement shall be kept moist between the hours of 10:00 a.m. and 4:30 p.m. on the day the concrete is placed. However, the fogging done after the curing compound has been applied shall not begin until the compound has set sufficiently to prevent displacement. Fogging shall be discontinued if ordered in writing by the Engineer.

90-7.03 CURING STRUCTURES

• Newly placed concrete for cast-in-place structures, other than highway bridge decks, shall be cured by the water method, the forms-in-place method, or, as permitted herein, by the curing compound method, in conformance with the provisions in Section 90-7.01, "Methods of Curing."

• The curing compound method using a pigmented curing compound may be used on concrete surfaces of construction joints, surfaces that are to be buried underground, and surfaces where only Ordinary Surface Finish is to be applied and on which a uniform color is not required and that will not be visible from a public traveled way. If the Contractor elects to use the curing compound method on the bottom slab of box girder spans, the curing compound shall be curing compound (1).

• The top surface of highway bridge decks shall be cured by both the curing compound method and the water method. The curing compound shall be curing compound (1).

• Concrete surfaces of minor structures, as defined in Section 51-1.02, "Minor Structures," shall be cured by the water method, the forms-in-place method or the curing compound method.

• When deemed necessary by the Engineer during periods of hot weather, water shall be applied to concrete surfaces being cured by the curing compound method or by the forms-in-place method, until the Engineer determines that a cooling effect is no longer required. Application of water for this purpose will be paid for as extra work as provided in Section 4-1.03D, "Extra Work."

90-7.04 CURING PRECAST CONCRETE MEMBERS

• Precast concrete members shall be cured in conformance with any of the methods specified in Section 90-7.01, "Methods of Curing." Curing shall be provided for the minimum time specified for each method or until the concrete reaches its design strength, whichever is less. Steam curing may also be used for precast members and shall conform to the following provisions:

A. After placement of the concrete, members shall be held for a minimum 4-hour presteaming period. If the ambient air temperature is below 10°C, steam shall be applied during the presteaming period to hold the air surrounding the member at a temperature between 10°C and 32°C.
B. To prevent moisture loss on exposed surfaces during the presteaming period, members shall be covered as soon as possible after casting or the exposed surfaces shall be kept wet by fog spray or wet blankets.

C. Enclosures for steam curing shall allow free circulation of steam about the member and shall be constructed to contain the live steam with a minimum moisture loss. The use of tarpaulins or similar flexible covers will be permitted, provided they are kept in good repair and secured in such a manner as to prevent the loss of steam and moisture.
D. Steam at the jets shall be at low pressure and in a saturated condition. Steam jets shall not impinge directly on the concrete, test cylinders, or forms. During application of the steam, the temperature rise within the enclosure shall not exceed 22°C per hour. The curing temperature throughout the enclosure shall not exceed 65°C and shall be maintained at a constant level for a sufficient time necessary to develop the required transfer strength. Control cylinders shall be covered to prevent moisture loss and shall be placed in a location where temperature is representative of the average temperature of the enclosure.
E. Temperature recording devices that will provide an accurate, continuous, permanent record of the curing temperature shall be provided. A minimum of one temperature recording device per 60 m of continuous bed length will be required for checking temperature.
F. Members in pretension beds shall be detensioned immediately after the termination of steam curing while the concrete and forms are still warm, or the temperature under the enclosure shall be maintained above 15°C until the stress is transferred to the concrete.
G. Curing of precast concrete will be considered completed after termination of the steam curing cycle.

90-7.05 CURING PRECAST PRESTRESSED CONCRETE PILES

• Newly placed concrete for precast prestressed concrete piles shall be cured in conformance with the provisions in Section 90-7.04, "Curing Precast Concrete Members," except that piles with a class designation ending in C (corrosion resistant) shall be cured as follows:

A. Piles shall be either steam cured or water cured. If water curing is used, the piles shall be kept continuously wet by the application of water in conformance with the provisions in Section 90-7.01A, "Water Method."
B. If steam curing is used, the steam curing provisions in Section 90-7.04, "Curing Precast Concrete Members," shall apply except that the piles shall be kept continuously wet for their entire length for a period of not less than 3 days, including the holding and steam curing periods.

90-7.06 CURING SLOPE PROTECTION

• Concrete slope protection shall be cured in conformance with any of the methods specified in Section 90-7.01, "Methods of Curing."

• Concreted-rock slope protection shall be cured in conformance with any of the methods specified in Section 90-7.01, "Methods of Curing," or with a blanket of earth kept wet for 72 hours, or by sprinkling with a fine spray of water every 2 hours during the daytime for a period of 3 days.

90-7.07 CURING MISCELLANEOUS CONCRETE WORK

• Exposed surfaces of curbs shall be cured by pigmented curing compounds as specified in Section 90-7.01B, "Curing Compound Method."

• Concrete sidewalks, gutter depressions, island paving, curb ramps, driveways, and other miscellaneous concrete areas shall be cured in conformance with any of the methods specified in Section 90-7.01, "Methods of Curing."

• Shotcrete shall be cured for at least 72 hours by spraying with water, or by a moist earth blanket, or by any of the methods provided in Section 90-7.01, "Methods of Curing."

• Mortar and grout shall be cured by keeping the surface damp for 3 days.

• After placing, the exposed surfaces of sign structure foundations, including pedestal portions, if constructed, shall be cured for at least 72 hours by spraying with water, or by a moist earth blanket, or by any of the methods provided in Section 90-7.01, "Methods of Curing."

90-8 PROTECTING CONCRETE

90-8.01 GENERAL

• In addition to the provisions in Section 7-1.16, "Contractor's Responsibility for the Work and Materials," the Contractor shall protect concrete as provided in this Section 90-8.

• Concrete shall not be placed on frozen or ice-coated ground or subgrade nor on ice-coated forms, reinforcing steel, structural steel, conduits, precast members, or construction joints.

• Under rainy conditions, placing of concrete shall be stopped before the quantity of surface water is sufficient to damage surface mortar or cause a flow or wash of the concrete surface, unless the Contractor provides adequate protection against damage.

• Concrete that has been frozen or damaged by other causes, as determined by the Engineer, shall be removed and replaced by the Contractor at the Contractor's expense.

90-8.02 PROTECTING CONCRETE STRUCTURES

• Structure concrete and shotcrete used as structure concrete shall be maintained at a temperature of not less than 7°C for 72 hours after placing and at not less than 4°C for an additional 4 days. When required by the Engineer, the Contractor shall submit a written outline of the proposed methods for protecting the concrete.

90-8.03 PROTECTING CONCRETE PAVEMENT

• Pavement concrete shall be maintained at a temperature of not less than 4°C for 72 hours. When required by the Engineer, the Contractor shall submit a written outline of the proposed methods for protecting the concrete.

• Except as provided in Section 7-1.08, "Public Convenience," the Contractor shall protect concrete pavement against construction and other activities that abrade, scar, discolor, reduce texture depth, lower coefficient of friction, or otherwise damage the surface. Stockpiling, drifting, or excessive spillage of soil, gravel, petroleum products, and concrete or asphalt mixes on the surface of concrete pavement is prohibited unless otherwise specified in these specifications, the special provisions or permitted by the Engineer.

• When ordered by the Engineer or shown on the plans or specified in the special provisions, pavement crossings shall be constructed for the convenience of public traffic. The material and work necessary for the construction of the crossings, and their subsequent removal and disposal, will be paid for at the contract unit prices for the items of work involved and if there are no contract items for the work involved, payment for pavement crossings will be made by extra work as provided in Section 4-1.03D, "Extra Work.". Where public traffic will be required to cross over the new pavement, Type III portland cement may be used in concrete, if permitted in writing by the Engineer. The pavement may be opened to traffic as soon as the concrete has developed a modulus of rupture of 3.8 MPa. The modulus of rupture will be determined by California Test 523.

• No traffic or Contractor's equipment, except as hereinafter provided, will be permitted on the pavement before a period of 10 days has elapsed after the concrete has been placed, nor before the concrete has developed a modulus of rupture of at least 3.8 MPa. Concrete that fails to attain a modulus of rupture of 3.8 MPa within 10 days shall not be opened to traffic until directed by the Engineer.

• Equipment for sawing weakened plane joints will be permitted on the pavement as specified in Section 40-1.08B, "Weakened Plane Joints."

• When requested in writing by the Contractor, the tracks on one side of paving equipment will be permitted on the pavement after a modulus of rupture of 2.4 MPa has been attained, provided that:

A. Unit pressure exerted on the pavement by the paver shall not exceed 135 kPa;
B. Tracks with cleats, grousers, or similar protuberances shall be modified or shall travel on planks or equivalent protective material, so that the pavement is not damaged; and
C. No part of the track shall be closer than 0.3-m from the edge of pavement.

• In case of visible cracking of, or other damage to the pavement, operation of the paving equipment on the pavement shall be immediately discontinued.

• Damage to the pavement resulting from early use of pavement by the Contractor's equipment as provided above shall be repaired by the Contractor at the Contractor's expense.

• The State will furnish the molds and machines for testing the concrete for modulus of rupture, and the Contractor, at the Contractor's expense, shall furnish the material and whatever labor the Engineer may require.

90-9 COMPRESSIVE STRENGTH

90-9.01 GENERAL

• Concrete compressive strength requirements consist of a minimum strength that shall be attained before various loads or stresses are applied to the concrete and, for concrete designated by strength, a minimum strength at the age of 28 days or at the age otherwise allowed in Section 90-1.01, "Description." The various strengths required are specified in these specifications or the special provisions or are shown on the plans.

• The compressive strength of concrete will be determined from test cylinders that have been fabricated from concrete sampled in conformance with the requirements of California Test 539. Test cylinders will be molded and initially field cured in conformance with California Test 540. Test cylinders will be cured and tested after receipt at the testing laboratory in conformance with the requirements of California Test 521. A strength test shall consist of the average strength of 2 cylinders fabricated from material taken from a single load of concrete, except that, if any cylinder should show evidence of improper sampling, molding, or testing, that cylinder shall be discarded and the strength test shall consist of the strength of the remaining cylinder.

• When concrete compressive strength is specified as a prerequisite to applying loads or stresses to a concrete structure or member, test cylinders for other than steam cured concrete will be cured in conformance with Method 1 of California Test 540. The compressive strength of concrete determined for these purposes will be evaluated on the basis of individual tests.

• When concrete is designated by 28-day compressive strength rather than by cementitious material content, the concrete strength to be used as a basis for acceptance of other than steam cured concrete will be determined from cylinders cured in conformance with Method 1 of California Test 540. If the result of a single compressive strength test at the maximum age specified or allowed is below the specified strength but is 95 percent or more of the specified strength, the Contractor shall, at the Contractor’s expense, make corrective changes, subject to approval of the Engineer, in the mix proportions or in the concrete fabrication procedures, before placing additional concrete, and shall pay to the State $14 for each in-place cubic meter of concrete represented by the deficient test. If the result of a single compressive strength test at the maximum age specified or allowed is below 95 percent of the specified strength, but is 85 percent or more of the specified strength, the Contractor shall make the corrective changes specified above, and shall pay to the State $20 for each in place cubic meter of concrete represented by the deficient test. In addition, such corrective changes shall be made when the compressive strength of concrete tested at 7 days indicates, in the judgment of the Engineer, that the concrete will not attain the required compressive strength at the maximum age specified or allowed. Concrete represented by a single test that indicates a compressive strength of less than 85 percent of the specified 28-day compressive strength will be rejected in conformance with the provisions in Section 6-1.04, "Defective Materials."

- If the test result indicates that the compressive strength at the maximum curing age specified or allowed is below the specified strength, but is 85 percent or more of the specified strength, payments to the State as required above shall be made, unless the Contractor, at the Contractor's expense, obtains and submits evidence acceptable to the Engineer that the strength of the concrete placed in the work meets or exceeds the specified 28-day compressive strength. If the test result indicates a compressive strength at the maximum curing age specified or allowed below 85 percent, the concrete represented by that test will be rejected, unless the Contractor, at the Contractor's expense, obtains and submits evidence acceptable to the Engineer that the strength and quality of the concrete placed in the work are acceptable. If the evidence consists of tests made on cores taken from the work, the cores shall be obtained and tested in conformance with the requirements in ASTM Designation: C 42.
- No single compressive strength test shall represent more than 250 m^3.
- When a precast concrete member is steam cured, the compressive strength of the concrete will be determined from test cylinders that have been handled and stored in conformance with Method 3 of California Test 540. The compressive strength of steam cured concrete will be evaluated on the basis of individual tests representing specific portions of production. When the concrete is designated by 28-day compressive strength rather than by cementitious material content, the concrete shall be considered to be acceptable whenever its compressive strength reaches the specified 28-day compressive strength provided that strength is reached in not more than the maximum number of days specified or allowed after the member is cast.
- When concrete is specified by compressive strength, prequalification of materials, mix proportions, mixing equipment, and procedures proposed for use will be required prior to placement of the concrete. Prequalification shall be accomplished by the submission of acceptable certified test data or trial batch reports by the Contractor. Prequalification data shall be based on the use of materials, mix proportions, mixing equipment, procedures, and size of batch proposed for use in the work.
- Certified test data, in order to be acceptable, shall indicate that not less than 90 percent of at least 20 consecutive tests exceed the specified strength at the maximum number of cure days specified or allowed, and none of those tests are less than 95 percent of specified strength. Strength tests included in the data shall be the most recent tests made on concrete of the proposed mix design and all shall have been made within one year of the proposed use of the concrete.
- Trial batch test reports, in order to be acceptable, shall indicate that the average compressive strength of 5 consecutive concrete cylinders, taken from a single batch, at not more than 28 days (or the maximum age allowed) after molding shall be at least 4 MPa greater than the specified 28-day compressive strength, and no individual cylinder shall have a strength less than the specified strength at the maximum age specified or allowed. Data contained in the report shall be from trial batches that were produced within one year of the proposed use of specified strength concrete in the project. Whenever air-entrainment is required, the air content of trial batches shall be equal to or greater than the air content specified for the concrete without reduction due to tolerances.
- Tests shall be performed in conformance with either the appropriate California Test methods or the comparable ASTM test methods. Equipment employed in testing shall be in good condition and shall be properly calibrated. If the tests are performed during the life of the contract, the Engineer shall be notified sufficiently in advance of performing the tests in order to witness the test procedures.
- The certified test data and trial batch test reports shall include the following information:

A. Date of mixing.
B. Mixing equipment and procedures used.
C. The size of batch in cubic meters and the mass, type, and source of all ingredients used.
D. Penetration of the concrete.
E. The air content of the concrete if an air-entraining admixture is used.

F. The age at time of testing and strength of all concrete cylinders tested.

- Certified test data and trial batch test reports shall be signed by an official of the firm that performed the tests.
- When approved by the Engineer, concrete from trial batches may be used in the work at locations where concrete of a lower quality is required and the concrete will be paid for as the type or class of concrete required at that location.
- After materials, mix proportions, mixing equipment, and procedures for concrete have been prequalified for use, additional prequalification by testing of trial batches will be required prior to making changes that, in the judgment of the Engineer, could result in a strength of concrete below that specified.
- The Contractor's attention is directed to the time required to test trial batches and the Contractor shall be responsible for production of trial batches at a sufficiently early date so that the progress of the work is not delayed.
- When precast concrete members are manufactured at the plant of an established manufacturer of precast concrete members, the mix proportions of the concrete shall be determined by the Contractor, and a trial batch and prequalification of the materials, mix proportions, mixing equipment, and procedures will not be required.

90-10 MINOR CONCRETE

90-10.01 GENERAL

- Concrete for minor structures, slope paving, curbs, sidewalks and other concrete work, when designated as minor concrete on the plans, in the specifications, or in the contract item, shall conform to the provisions specified herein.
- The Engineer, at the Engineer's discretion, will inspect and test the facilities, materials and methods for producing the concrete to ensure that minor concrete of the quality suitable for use in the work is obtained.

90-10.02 MATERIALS

- Minor concrete shall conform to the following requirements:

90-10.02A Cementitious Material

- Cementitious material shall conform to the provisions in Section 90-1.01, "Description."

90-10.02B Aggregate

- Aggregate shall be clean and free from deleterious coatings, clay balls, roots, and other extraneous materials.
- The Contractor shall submit to the Engineer for approval, a grading of the combined aggregate proposed for use in the minor concrete. After acceptance of the grading, aggregate furnished for minor concrete shall conform to that grading, unless a change is authorized in writing by the Engineer.
- The Engineer may require the Contractor to furnish periodic test reports of the aggregate grading furnished. The maximum size of aggregate used shall be at the option of the Contractor, but in no case shall the maximum size be larger than 37.5 mm or smaller than 19 mm.
- The Engineer may waive, in writing, the gradation requirements in this Section 90-10.02B, if, in the Engineer's opinion, the furnishing of the gradation is not necessary for the type or amount of concrete work to be constructed.

90-10.02C Water

- Water used for washing, mixing, and curing shall be free from oil, salts, and other impurities that would discolor or etch the surface or have an adverse affect on the quality of the concrete.

90-10.02D Admixtures

- The use of admixtures shall conform to the provisions in Section 90-4, "Admixtures."

90-10.03 PRODUCTION

- Cementitious material, water, aggregate, and admixtures shall be stored, proportioned, mixed, transported, and discharged in conformance with recognized standards of good practice that will result in concrete that is thoroughly and uniformly mixed, that is suitable for the use intended, and that conforms to requirements specified herein. Recognized standards of good practice are outlined in various industry publications such as are issued by American Concrete Institute, AASHTO, or the Department.
- The cementitious material content of minor concrete shall conform to the provisions in Section 90-1.01, "Description."
- The amount of water used shall result in a consistency of concrete conforming to the provisions in Section 90-6.06, "Amount of Water and Penetration." Additional mixing water shall not be incorporated into the concrete during hauling or after arrival at the delivery point, unless authorized by the Engineer.
- Discharge of ready-mixed concrete from the transporting vehicle shall be made while the concrete is still plastic and before stiffening occurs. An elapsed time of 1.5 hours (one hour in non-agitating hauling equipment), or more than 250 revolutions of the drum or blades, after the introduction of the cementitious material to the aggregates, or a temperature of concrete of more than 32°C will be considered conditions contributing to the quick stiffening of concrete. The Contractor shall take whatever action is necessary to eliminate quick stiffening, except that the addition of water will not be permitted.
- The required mixing time in stationary mixers shall be not less than 50 seconds or more than 5 minutes.
- The minimum required revolutions at mixing speed for transit-mixed concrete shall be not less than that recommended by the mixer manufacturer, and shall be increased, if necessary, to produce thoroughly and uniformly mixed concrete.
- Each load of ready-mixed concrete shall be accompanied by a weighmaster certificate that shall be delivered to the Engineer at the discharge location of the concrete, unless otherwise directed by the Engineer. The weighmaster certificate shall be clearly marked with the date and time of day when the load left the batching plant and, if hauled in truck mixers or agitators, the time the mixing cycle started.
- A Certificate of Compliance conforming to the provisions in Section 6–1.07, "Certificates of Compliance," shall be furnished to the Engineer, prior to placing minor concrete from a source not previously used on the contract, stating that minor concrete to be furnished meets contract requirements, including minimum cementitious material content specified.

90-10.04 CURING MINOR CONCRETE

- Curing minor concrete shall conform to the provisions in Section 90-7, "Curing Concrete."

90-10.05 PROTECTING MINOR CONCRETE

- Protecting minor concrete shall conform to the provisions in Section 90-8, "Protecting Concrete," except the concrete shall be maintained at a temperature of not less than 4°C for 72 hours after placing.

90-10.06 MEASUREMENT AND PAYMENT

- Minor concrete will be measured and paid for in conformance with the provisions specified in the various sections of these specifications covering concrete construction when minor concrete is specified in the specifications, shown on the plans, or indicated by contract item in the Engineer's Estimate.

90-11 MEASUREMENT AND PAYMENT

90-11.01 MEASUREMENT

- Portland cement concrete will be measured in conformance with the provisions specified in the various sections of these specifications covering construction requiring concrete.
- When it is provided that concrete will be measured at the mixer, the volume in cubic meters shall be computed as the total mass of the batch in kilograms divided by the density of the concrete in kilograms per cubic meter. The total mass of the batch shall be calculated as the sum of all materials, including water, entering the batch. The density of the concrete will be determined in conformance with the requirements in California Test 518.

90-11.02 PAYMENT

- Portland cement concrete will be paid for in conformance with the provisions specified in the various sections of these specifications covering construction requiring concrete.
- Full compensation for furnishing and incorporating admixtures required by these specifications or the special provisions will be considered as included in the contract prices paid for the concrete involved and no additional compensation will be allowed therefor.
- Should the Engineer order the Contractor to incorporate any admixtures in the concrete when their use is not required by these specifications or the special provisions, furnishing the admixtures and adding them to the concrete will be paid for as extra work as provided in Section 4-1.03D, "Extra Work."
- Should the Contractor use admixtures in conformance with the provisions in Section 90-4.05, "Optional Use of Chemical Admixtures," or Section 90-4.07, "Optional Use of Air-entraining Admixtures," or should the Contractor request and obtain permission to use other admixtures for the Contractor’s benefit, the Contractor shall furnish those admixtures and incorporate them into the concrete at the Contractor’s expense and no additional compensation will be allowed therefor.

END OF AMENDMENTS

SECTION 1. SPECIFICATIONS AND PLANS

1-1.01 GENERAL

The work embraced herein constitutes a "Minor Contract". The work shall be done in accordance with the July, 1999 Standard Specifications and the July, 1999 Standard Plans of the Department of Transportation and in accordance with the following special provisions and proposal, the proposed "Form of Contract" and the attached Project Plans and applicable “Standard Plan” sheets.

Project plans shall consist of Drawing Number 1 through 4.

All references to the Director in the July, 1999 Standard Specifications shall be construed to mean the District Director.

Any paragraph of the Standard Specifications referencing or pertaining to Chapter 1, (commencing with Section 10100) of Part 2 of Division 2 of the Public Contract Code shall not apply to this contract.

In the event of conflict between the Standard Specifications and these special provisions, the special provisions shall take precedence over and be used in lieu of such conflicting portions.

1-1.02 STANDARD PLANS LIST -

The Standard Plan sheets applicable to this contract include, but are not limited to those indicated below. Applicable Revised Standard Plan (RSP) and New Standard Plan (NSP) indicated below are included in the project plans as individual Standard Plan sheets.

A10A	**Abbreviations**
A10B	**Symbols**
H1	**Planting and Irrigation – Abbreviations**
H2	**Planting and Irrigation – Symbols**
H3	**Planting and Irrigation Details**
H4	**Planting and Irrigation Details**
H5	**Planting and Irrigation Details**
H6	**Planting and Irrigation Details**
H7	**Planting and Irrigation Details**
H8	**Planting and Irrigation Details**

SECTION 2. PROPOSAL REQUIREMENTS AND CONDITIONS

2-1.01 GENERAL

The bidder's attention is directed to the provisions in Section 2, "Proposal Requirements and Conditions," of the Standard Specifications and these special provisions for the requirements and conditions which the bidder must observe in the preparation of the proposal form and the submission of the bid.

In addition to the subcontractors required to be listed in accordance with Section 2-1.054, "Required Listing of Proposed Subcontractors," of the Standard Specifications, each proposal shall have listed therein the name and address of each DVBE subcontractor to be used for credit in meeting the goal, and to whom the bidder proposes to directly subcontract portions of the work. The list of subcontractors shall also set forth the portion of work that will be done by each subcontractor listed. A sheet for listing the subcontractors is included in the Proposal.

In accordance with Public Contract Code Section 7106, a Noncollusion Affidavit is included in the Proposal. Signing the Proposal shall also constitute signature of the Noncollusion Affidavit.

2-1.02 SUBMISSION OF BIDS

Bids for this project are to be submitted in a lump sum amount for the entire work.

2-1.03 DISABLED VETERAN BUSINESS ENTERPRISE (DVBE)

The Disabled Veteran Business Enterprise (DVBE) Participation Goal Program for state Contracts is established in Public Contract Code (PCC), §10115 et seq., Military and Veterans Code (MVC), §999 et seq., and California Code of Regulations (CCR), Title 2, §1896.60 et seq.

It is the policy of the Department that Disabled Veteran Business Enterprise (DVBE) shall be provided the opportunity for full participation in the performance of contracts financed solely with state funds. The Contractor shall ensure that DVBEs have such opportunity to participate in the performance of this contract and shall take all necessary and reasonable steps for this assurance. The Contractor shall not discriminate on the basis of race, color, national origin, or sex in the award and performance of subcontracts.

Bidder's attention is directed to the following:

(a) "Disabled Veteran Business Enterprise" (DVBE) means a business concern certified as a DVBE by the Office of Small Business Certification and Resources, Department of General Services.

(b) A DVBE may participate as a prime contractor, subcontractor, joint venture partner with a prime or subcontractor, or supplier of material or supplies.

(c) Credit for DVBE prime contractors will be 100 percent.

(d) A DVBE joint venture partner must be responsible for specific contract items of work, or portions thereof. Responsibility means actually performing, managing and supervising the work with its own forces. The DVBE joint venture partner must share in the ownership, control, management responsibilities, risks and profits of the joint venture. The DVBE joint venturer must submit the joint venture agreement with the Caltrans Bidder DVBE Information form required in Section 3-1.01A, "DVBE Information," elsewhere in these special provisions;

(e) California Code of Regulations, Title 2, § 1896.61(l): The term "DVBE contractor, subcontractor or supplier" means any person or entity that satisfies the ownership (or management) and control requirements of Section 1896.61(f); is certified in accordance with Section 1896.70; and provides services or goods that contribute to the fulfillment of the Agreement requirements by performing a commercially useful function.

As defined in MVC §999, a person or an entity is deemed to perform a "commercially useful function" if a person or entity does **all** of the following:

- Is responsible for the execution of a distinct element of the work of the contract.
- Carries out the obligation by actually performing, managing, or supervising the work involved.

- Performs work that is normal for its business services and functions.
- Is not further subcontracting a portion of the work that is greater than that expected to be subcontracted by normal industry practices.

  A contractor, subcontractor, or supplier will not be considered to perform a commercially useful function if the contractor's, subcontractor's, or supplier's role is limited to that of an extra participant in a transaction, contract, or project through which funds are passed in order to obtain the appearance of disabled veteran business enterprise participation.

(f) DVBEs and DVBE joint venture partners must be certified DVBEs as determined by the Department of General Services, Office of Small Business Certification and Resources 707 3rd Street, First Floor, Room 400, West Sacramento, CA 95605, on the date bids for the project are opened before credit may be allowed toward the DVBE goal. **It is the Contractor's responsibility to verify that DVBEs are certified,**

(g) Failure to carry out the requirements of the above paragraphs shall constitute a breach of contract and may result in termination of this contract or other remedy the Department may deem appropriate.

2-1.04 DVBE GOAL FOR THIS PROJECT

The Department has established the following goal for Disabled Veteran Business Enterprise (DVBE) participation for this project:

Disabled Veteran Business Enterprise (DVBE), **3** percent.

It is the bidder's responsibility to make a sufficient portion of the work available to subcontractors and suppliers and to select those portions of the work or material needs consistent with the available DVBE subcontractors and suppliers, so as to assure meeting the goal for DVBE participation.

DEPARTMENT OF GENERAL SERVICES -
OFFICE OF SMALL BUSINESS CERTIFICATION AND RESOURCES

The Office of Small Business Certification and Resources, Department of General Services, may be contacted at (916) 375-4940 or visit its internet web site at http://www.osmb.dgs.ca.gov/ for program information, including a list of trade and focus publications to assist bidders in meeting these contract requirements and the certification status of DVBEs.

CALTRANS BUSINESS ENTERPRISE PROGRAM

The Caltrans Department's Business Enterprise Program may be contacted at (916) 324-1700 or its internet web site at http://www.dot.ca.gov/hq/bep/.

CALIFORNIA DEPARTMENT OF TRANSPORTATION
PUBLICATIONS DISTRIBUTION UNIT

Call (916) 445-3520 to order a hard copy of the Directory of Certified Firms including DVBE firms. Have your credit card available to provide payment information.

The Internet address is http://caltrans-opac.ca.gov/publicat.htm. You can obtain an order form to purchase the Directory of Certified Firms by downloading the form from the Internet, completing it, and mailing or faxing it to: Department of Transportation Publications **Distribution** Unit, 1900 Royal Oaks Drive, Sacramento, CA 95815-3800. You can fax an order form to (916) 324-8997.

2-1.05 CALIFORNIA COMPANY PREFERENCE

Attention is directed to "Award and Execution of Contract" of these special provisions.

In accordance with the requirements of Section 6107 of the Public Contract Code, a "California company" will be granted a reciprocal preference for bid comparison purposes as against a nonresident contractor from any state that gives or requires a preference to be given contractors from that state on its public entity construction contracts.

A "California company" means a sole proprietorship, partnership, joint venture, corporation, or other business entity that was a licensed California contractor on the date when bids for the public contract were opened and meets one of the following:

(A) Has its principal place of business in California.
(B) Has its principal place of business in a state in which there is no local contractor preference on construction contracts.
(C) Has its principal place of business in a state in which there is a local contractor construction preference and the contractor has paid not less than $5000 in sales or use taxes to California for construction related activity for each of the five years immediately preceding the submission of the bid.

To carry out the "California company" reciprocal preference requirements of Section 6107 of the Public Contract Code, all bidders shall fill out and sign the California Company Preference form in the Proposal. The bidder's signature on the California Company Preference form certifies, under penalty of perjury, that the bidder is or is not a "California company" and if not, the amount of the preference applied by the state of the nonresident company.

A nonresident Contractor shall disclose any and all bid preferences provided to the nonresident Contractor by the state or country in which the nonresident Contractor has its principal place of business.

Proposals without the California Company Preference form filled out and signed may be rejected.

2-1.06 PROPOSAL GUARANTY

Section 2-1.07 "Proposal Guaranty" of the Standard Specifications is amended to read:

All bids shall be presented under sealed cover and accompanied by one of the following forms of bidder's security:

Cash, a cashier's check, a certified check, or a bidder's bond executed by an admitted surety insurer, made payable to the Director of Transportation.

The security shall be in an amount equal to at least 10 percent of the amount bid. A bid will not be considered unless one of the forms of bidder's security is enclosed with it. The bidder's bond shall conform to the bond form included in the bid proposal.

2-1.07 SMALL BUSINESS PREFERENCE

Attention is directed to Section 3 “Award Of Contract” of these special provisions.

Attention is also directed to the Small Business Procurement and Contract Act, Government Code Section 14835, et seq and Title 2, California Code of Regulations, Section 1896, et seq.

Bidders who wish to be classified as a Small Business under the provisions of those laws and regulations, shall be certified as Small Business by the Department of General Services, Office of Small Business Certification and Resources, **707 3rd Street, First Floor, Room 400, West Sacramento, CA 95605.**

To request Small Business Preference, bidders shall fill out and sign the Request for Small Business Preference form in the Proposal and write in their Small Business Certification number. The bidder's signature on the Request for Small Business Preference certifies, under penalty of perjury, that the bidder is certified as Small Business or has an application for Small Business certification on file with the Office of Small Business Certification and Resources (OSBCR) by 5:00 p.m. of the bid opening date and are subsequently granted Small Business certification.

SECTION 3. SUBMISSION OF DVBE INFORMATION AND AWARD AND EXECUTION OF CONTRACT

3-1.01 GENERAL

The bidder's attention is directed to the provisions in Section 3, "DVBE Information and Award and Execution of Contract," of the Standard Specifications and these special provisions for the requirements and conditions concerning submittal of DVBE information and award and execution of contract.

The required DVBE information shall be submitted on the "CALTRANS BIDDER - DVBE INFORMATION" form included in the Proposal..

It is the bidder's responsibility to meet the goal for DVBE participation or to provide information to establish that, prior to bidding, the bidder made a good faith effort to do so.

3-1.01A DVBE INFORMATION

The bidder's DVBE information submitted with the bid shall establish that the DVBE goal will be met or that a good faith effort to meet the goal has been made. Bidders are cautioned that even though their submittal indicates they will meet the stated DVBE goal, their submittal should also include their good faith efforts information along with their DVBE goal information to protect their eligibility for award of the contract in the event the Department, in its review, finds that the goal has not been met. Failure to submit the required DVBE information by the time specified will be grounds for finding the bid or proposal non-responsive.

The bidder's DVBE information shall include the names of DVBE firms and DVBE joint venture partners to be used, that will participate, with a complete description of work or supplies to be provided by each, the dollar value of each DVBE transaction, and a written confirmation on company letterhead from the DVBE that it is participating in the contract. A copy of the DVBE's quote will serve as written confirmation that the DVBE is participating in the contract. When 100 percent of a contract item of work is not to be performed or furnished by a DVBE, a description of the exact portion of that work to be performed or furnished by that DVBE shall be included in the DVBE information, including the planned location of that work. DVBE subcontractors to whom the bidder proposes to directly subcontract portions of the work are to be named in the bid. - See Section 2-1.054, "Required Listing of Proposed Subcontractors," of the Standard Specifications and Section 2-1.01, "General," of these special provisions, regarding listing of proposed subcontractors.

A bidder shall be deemed to have made good faith efforts upon submittal, within time limits specified by the Department, of documentary evidence that all of the following actions were taken:

(1) Contact the Caltrans Civil Rights Program to identify Disabled Veteran Business Enterprises by calling (916) 324-1700 or by faxing to **Attn: Contract Evaluation Unit at (916) 324-8435**. Internet contact is acceptable. Bidders **MUST** print out the applicable pages and submit with the bid package.

(2) Other State and Federal agencies and local DVBE organizations that were contacted to identify DVBEs. Contact was made with the Office of Small Business Certification and Resources (OSBCR), Department of General Services or their web site at http://www.pd.dgs.ca.gov/smbus to identify Disabled Veteran Business Enterprises. Contact also needs to be made a Federal agency and with a local DVBE organization. These groups are listed in the Resource Package provided by Office of Small Business Certification and Resources (OSBCR) through their office or internet site listed below.

Internet contact is acceptable. Bidders shall print out the applicable pages and submit with the bid package.

(3) Unless otherwise specified in the solicitation document, bidders must publish advertisements in trade and focus publications at least 14 calendar days prior to the due date of the response to the solicitation (CCR Title 2 Section 1896.63(d)(2). In accordance with Public Contract Code Section 10115.2(b)(3), bidders must advertise in trade and focus publications unless the DVBE goal is satisfied. The Office of Small Business Certification and Resources (OSBCR) publishes a list of trade and focus publications to assist bidders in meeting these contract requirements. To obtain this list, please contact the OSBCR and request the "Resource Packet". The OSBCR may be contacted at Department of General Services, Office of Small Business Certification and Resources, 707 3rd Street, First Floor, Room 400, West Sacramento, CA 95605 (916) 375-4940 or the internet at http://www.pd.dgs.ca.gov/smbus.

(4) Invitations to bid were submitted to potential Disabled Veteran Business Enterprise contractors.

(5) Available Disabled Veteran Business Enterprises were considered.

3-1.02 AWARD OF CONTRACT

The award of contract, if it be awarded, will be to the lowest responsible bidder whose proposal complies with all the requirements prescribed and who has met the goal for DVBE participation or has demonstrated, to the satisfaction of the Department, good faith effort to do so. Meeting the goal for DVBE participation or demonstrating, to the satisfaction of the Department, good faith efforts to do so is a condition for being eligible for award of contract.

A "Payee Data Record" form will be included in the contract documents to be executed by the successful bidder. The purpose of the form is to facilitate the collection of taxpayer identification data. The form shall be completed and returned to the Department by the successful bidder with the executed contract and contract bonds. For the purposes of the form, vendor shall be deemed to mean the successful bidder. The form is not to be completed for subcontractors or suppliers. Failure to complete and return the "Payee Data Record" form to the Department as provided herein will result in the retention of 20 percent of payments due the contractor and penalties of up to $20,000. This retention of payments for failure to complete the "Payee Data Record" form is in addition to any other retention of payments due the Contractor.

Attention is also directed to "Small Business Preference" of these special provisions. Any bidder who is certified as a Small Business by the Department of General Services, Office of Small Business Certification and Resources will be allowed a preference in the award of this contract, if it be awarded, under the following conditions:

(1) The apparent low bidder is not certified as a Small Business, or has not filled out and signed the Request for Small Business Preference included with the bid documents and written their Office of Small Business Certification and Resources (OSBCR) small business certification number on the form; and

(2) The bidder filled out and signed the Request for Small Business Preference form included with the bid documents wrote their Office of Small Business Certification and Resources (OSBCR) small business certification number on the form.

The small business preference will be a reduction in the bid submitted by the small business contractor, for bid comparison purposes, by an amount equal to 5 percent of the amount bid by the apparent low bidder, the amount not to exceed $50,000. If this reduction results in the small business contractor becoming the low bidder, then the contract will be awarded to the small business contractor on the basis of the actual bid of the small business contractor notwithstanding the reduced bid price used for bid comparison purposes.

Attention is also directed to "California Company Preference" of these special provisions.

The amount of the California company reciprocal preference shall be equal to the amount of the preference applied by the state of the nonresident contractor with the lowest responsive bid, except where the "California company" is eligible for a California Small Business Preference, in which case the preference applied shall be the greater of the two, but not both.

If the bidder submitting the lowest responsive bid is not a "California company" and with the benefit of the reciprocal preference, a "California company's" responsive bid is equal to or less than the original lowest responsive bid, the "California company" will be awarded the contract at its submitted bid price except as provided below.

Small business bidders shall have precedence over non-small business bidders in that the application of the "California company" preference for which non-small business bidders may be eligible shall not result in the denial of the award to a small business bidder.

3-1.03 FAILURE TO EXECUTE CONTRACT

Section 3-1.04, "Failure to Execute Contract," of the Standard Specifications shall not apply to contracts, where the bid amount is $5,000 or less.

3-1.04 INSURANCE PROVISIONS

The Contractor shall furnish to the State a certificate of insurance stating that there is liability insurance presently in effect for the Contractor with a combined single limit (CSL) of not less than $1,000,000 per occurrence.

The certificate of insurance will provide:

1. That the insurer will not cancel the insured's coverage without 30 days prior written notice to the State.
2. That the State of California, its officers, agents, employees, and servants are included as additional insureds, but only insofar as the operations under this contract are concerned.
3. That the State will not be responsible for any premiums or assessments on the policy**.**

Contractor agrees that the automobile, bodily injury liability and property damage insurance herein provided for shall be in effect at all times during the term of this contract. In the event said insurance coverage expires at any time or times during the term of this contract, Contractor agrees to provide at least thirty (30) days prior to said expiration date, a new certificate of insurance evidencing insurance coverage as provided for herein for not less than the remainder of the term of the contract, or for a period of not less than one (1) year. New certificates of insurance are subject to the approval of the State and Contractor agrees that no work or services shall be performed prior to the giving of such approval. In the event Contractor fails to keep in effect at all times insurance coverage as

herein provided, State may, in addition to any other remedies it may have, terminate this contract upon the occurrence of such event.

3-1.05 LICENSED CONTRACTOR STANDARDS FOR QUALITY OF WORK

Licensed contractors must observe professional standards for quality of work or the California Contractors State License Board will invoke disciplinary action.

Notice is hereby given that certain actions by a Contractor, including, but not limited to the following, constitute grounds for disciplinary action once the State has notified the license board of all violations:

a. A willful departure from plans and specifications or disregard of trade standards for good and workmanlike construction in any material respect that might prejudice the Department of Transportation, owner of the property upon which you perform work (Bus. & Prof. Code, 7109).
b. The failure to observe and comply with all of the applicable labor laws (Bus. & Prof. Code 7110).
c. Material failure to complete this contract (Bus. & Prof. Code 7113).

Should the State determine that the work or materials provided vary materially from the specifications, or that defective work when completed was not performed in a workmanlike manner, then the Contractor warrants that he/she shall perform all necessary repairs, replacement and corrections needed to restore the property according to the contract plans and specifications, all at no further or additional cost to the State.

SECTION 4. SECTION 4. BEGINNING OF WORK, TIME OF COMPLETION AND LIQUIDATED DAMAGES

Attention is directed to the provisions in Section 8-1.03, "Beginning of Work," in Section 8-1.06, "Time of Completion," and in Section 8-1.07, "Liquidated Damages," of the Standard Specifications and these special provisions.

The Contractor shall begin work by the date specified in the Contract Administrator’s letter informing him/her that the contract has been approved.

The work shall be diligently prosecuted to completion before the expiration of

750 WORKING DAYS

including the specified starting date.

The Contractor shall notify Contract Administrator

Mr. Jerry Sandiago, Senior Transportation Engineer (Construction)
2320 Courage Drive, Suite 106
Fairfield, CA 94533
Telephone : (707) 428-2197 Fax : (707) 428-2094

at least 72 hours in advance of starting work.

The Contractor shall pay to the State of California the sum of $200 per day, for each and every calendar day's delay in finishing the work in excess of the number of working days prescribed above. In addition to any penalties prescribed herein, should the Contractor fail to commence work within five (5) working days after

notification of the starting date, or suspend work for a period of five (5) continuous working days after work has begun, the State may provide five (5) days written notice, posted at the job site or mailed to the Contractor, to timely prosecute and complete the work or the contract may be terminated and liquidated damages of $500.00 assessed for administrative costs for re-bidding the work.

In addition, the Contractor shall be liable to the State for the difference between the Contractor's bid price and the actual cost of performing the work by the second low bidder or by another contractor.

SECTION 5. GENERAL

5-1.01 PLANS AND WORKING DRAWINGS

When the specifications require working drawings to be submitted to the Division of Maintenance, the drawings shall be submitted to:

Department of Transportation Dist.-04, Office of Maintenance and Toll Bridge Engineering,
111 Grand Avenue, P.O.Box 23660, Oakland ,CA 94623-0660
Telephone 510-286-5198

5-1.011 EXAMINATION OF PLANS, SPECIFICATIONS, CONTRACT, AND SITE OF WORK

Attention is directed to "Differing Site Conditions" of these special provisions regarding physical conditions at the site which may differ from those indicated in "Materials Information," log of test borings or other geotechnical information obtained by the Department's investigation of site conditions.

5-1.012 DIFFERING SITE CONDITIONS

Attention is directed to Section 5-1.116, "Differing Site Conditions," of the Standard Specifications.

During the progress of the work, if subsurface or latent conditions are encountered at the site differing materially from those indicated in the "Materials Information," log of test borings, other geotechnical data obtained by the Department's investigation of subsurface conditions, or an examination of the conditions above ground at the site, the party discovering those conditions shall promptly notify the other party in writing of the specific differing conditions before they are disturbed and before the affected work is performed.

The Contractor will be allowed 3 days from the notification of the Engineer's determination of whether or not an adjustment of the contract is warranted, in which to file a notice of potential claim in conformance with the provisions of Section 9-1.04, "Notice of Potential Claim," of the Standard Specifications and as specified herein; otherwise the decision of the Engineer shall be deemed to have been accepted by the Contractor as correct. The notice of potential claim shall set forth in what respects the Contractor's position differs from the Engineer's determination and provide any additional information obtained by the Contractor, including but not limited to additional geotechnical data. The notice of potential claim shall be accompanied by the Contractor's certification that the following were made in preparation of the bid: a review of the contract, a review of the "Materials Information," a review of the log of test borings and other records of geotechnical data to the extent they were made available to bidders prior to the opening of bids, and an examination of the conditions above ground at the site. Supplementary information, obtained by the Contractor subsequent to the filing of the notice of potential claim, shall be submitted to the Engineer in an expeditious manner.

5-1.015 LABORATORY

When a reference is made in the specifications to the "Laboratory," the reference shall mean Division of Engineering Services - Materials Engineering and Testing Services and Division of Engineering Services - Geotechnical Services of the Department of Transportation, or established laboratories of the various Districts

of the Department, or other laboratories authorized by the Department to test materials and work involved in the contract. When a reference is made in the specifications to the "Transportation Laboratory," the reference shall mean Division of Engineering Services - Materials Engineering and Testing Services and Division of Engineering Services - Geotechnical Services, located at 5900 Folsom Boulevard, Sacramento, CA 95819, Telephone (916) 227-7000.

5-1.017 CONTRACT BONDS

Attention is directed to Section 3-1.02, "Contract Bonds," of the Standard Specifications and these special provisions.

The payment bond shall be in a sum not less than one hundred percent of the total amount payable by the terms of the contract.

5-1.019 COST REDUCTION INCENTIVE

Attention is directed to Section 5-1.14, "Cost Reduction Incentive," of the Standard Specifications.

Prior to preparing a written cost reduction proposal, the Contractor shall request a meeting with the Engineer to discuss the proposal in concept. Items of discussion will also include permit issues, impact on other projects, impact on the project schedule, peer reviews, overall merit of the proposal, and review times required by the Department and other agencies.

5-1.02 LABOR NONDISCRIMINATION

Attention is directed to the following Notice that is required by Chapter 5 of Division 4 of Title 2, California Code of Regulations.

NOTICE OF REQUIREMENT FOR NONDISCRIMINATION PROGRAM
(GOV. CODE, SECTION 12990)

Your attention is called to the "Nondiscrimination Clause", set forth in Section 7-1.01A(4), "Labor Nondiscrimination," of the Standard Specifications, which is applicable to all nonexempt State contracts and subcontracts, and to the "Standard California Nondiscrimination Construction Contract Specifications" set forth therein. The specifications are applicable to all nonexempt State construction contracts and subcontracts of $5000 or more.

Statement of Compliance.--The Contractor's signature affixed hereon and dated shall constitute a certification under the penalty of perjury under the laws of the State of California that the Contractor has, unless exempted, complied with the nondiscrimination program requirements of Government Code Section 12990 and title 2, California Code of regulations, Section 8103.

5-1.03 INTEREST ON PAYMENTS

Interest shall be payable on progress payments, payments after acceptance, final payments, extra work payments, and claim payments as follows:

A. Unpaid progress payments, payment after acceptance, and final payments shall begin to accrue interest 30 days after the Engineer prepares the payment estimate.

B. Unpaid extra work bills shall begin to accrue interest 30 days after preparation of the first pay estimate following receipt of a properly submitted and undisputed extra work bill. To be properly submitted, the bill must be submitted within 7 days of the performance of the extra work and in conformance with the

provisions in Section 9-1.03C, "Records," and Section 9-1.06, "Partial Payments," of the Standard Specifications. An undisputed extra work bill not submitted within 7 days of performance of the extra work will begin to accrue interest 30 days after the preparation of the second pay estimate following submittal of the bill.

C. The rate of interest payable for unpaid progress payments, payments after acceptance, final payments, and extra work payments shall be 10 percent per annum.

D. The rate of interest payable on a claim, protest or dispute ultimately allowed under this contract shall be 6 percent per annum. Interest shall begin to accrue 61 days after the Contractor submits to the Engineer information in sufficient detail to enable the Engineer to ascertain the basis and amount of said claim, protest or dispute.

The rate of interest payable on any award in arbitration shall be 6 percent per annum if allowed under the provisions of Civil Code Section 3289.

5-1.031 FINAL PAYMENT AND CLAIMS

Payment will be made for and include full compensation for furnishing all labor, tools, equipment, materials, travel time and incidentals necessary to complete the work as specified in these special provisions and as directed by the Resident Engineer.

Payment will be made to the Contractor, in arrears, upon receipt of fully itemized invoices, submitted in triplicate, and only for the cost of the actual service rendered.

Invoices shall reference the Department of Transportation and this contract number, and shall be submitted to the Resident Engineer's Office.

Section 9-1.07B, "Final Payment and Claims," of the Standard Specifications is amended to read:

9-1.07B Final Payment and Claims

Within 30 calendar days following acceptance of the contract, the contractor shall submit to the Engineer a fully-itemized invoice, in triplicate, covering the actual work performed. Any claims must be filed in writing at this time, and should accompany the invoice. No claim will be considered that was not included in the written statement of claims, nor will any claim be allowed as to which a notice or protest is required under the provisions in Sections 4-1.03, "Changes," 8-1.06, "Time of Completion," 8-1.07, "Liquidated Damages," 5-1.116, "Differing Site Conditions," 8-1.10, "Utility and Non-Highway Facilities," and 9-1.04, "Notice of Potential Claim," unless the Contractor has complied with the notice or protest requirements in said sections.

If no claim is filed with submittal of the invoice, the Engineer will immediately process the invoice and the State will make payment of the monies due. Such payment shall be conclusive and binding against both parties to the contract on all questions relating to the amount of work done and the compensation payable therefor, except as other wise provided in Sections 9-1.03C, "Records," and 9-1.09, "Clerical Errors."

If the Contractor files claims, the Engineer will immediately process the invoice and the State will make payment for the monies due on the undisputed work. Such payment shall be conclusive and binding against both parties to the contract on all questions relating to the amount of work done and the compensation payable therefor, except insofar as affected by the claims filed within the time and in the manner required hereunder and except as otherwise provided in Sections 9-1.03C, "Records," and 9-1.09, "Clerical Errors."

Claims filed by the Contractor shall be in sufficient detail to enable the Engineer to ascertain the basis and amount of said claims. If additional information or details are required by the Engineer to determine the basis and amount of said claims, the Contractor shall furnish such further information or details so that the information or details are received by the Engineer no later than the fifteenth day after receipt of the written request from the Engineer. If the fifteenth day falls on a Saturday, Sunday or legal holiday, then receipt of such

information or details by the Engineer shall not be later than close of business of the next business day. Failure to submit such information and details to the Engineer within the time specified will be sufficient cause for denying the claim.

The Contractor shall keep full and complete records of the costs and additional time incurred for any work for which a claim for additional compensation is made. The Engineer or any designated claim investigator or auditor shall have access to those records and any other records as may be required by the Engineer to determine the facts or contentions involved in the claims. Failure to permit access to such records shall be sufficient cause for denying the claims.

Claims submitted by the Contractor shall be accompanied by a notarized certificate containing the following language:

Under the penalty of law for perjury or falsification and with specific reference to the California False Claims Act, Government Code Section 12650 et. seq., the undersigned,

_____,
(name)
_____ of
(title)
_____,
(company)

hereby certifies that the claim for the additional compensation and time, if any, made herein for the work on this contract is a true statement of the actual costs incurred and time sought, and is fully documented and supported under the contract between parties.

Dated _____

/s/ _____

Subscribed and sworn before me this _____ day

of _____

_____
Notary Public
My Commission Expires _____

Failure to submit the notarized certificate will be sufficient cause for denying the claim.

Any claim for overhead type expenses or costs, in addition to being certified as stated above, shall be supported by an audit report of an independent Certified Public Accountant. Any such overhead claim shall also be subject to audit by the State at its discretion.

Any costs or expenses incurred by the State in reviewing or auditing any claims that are not supported by the Contractor's cost accounting or other records shall be deemed to be damages incurred by the State within the meaning of the California False Claims Act.

The District Director of the District which administers the contract will make the final determination of any claims which remain in dispute after completion of claim review by the Engineer. A person designated by said District Director will review such claims and make a written recommendation thereon to the District Director. Within 30 days after the Contractor is given written notification by the Engineer that the person is designated, the Contractor shall meet with the person to make a presentation in support of such claims.

Upon final determination of the claims, the Engineer will then make and issue his final estimate in writing and within 30 days thereafter the State will pay the entire sum, if any, found due thereon. Such final estimate shall be conclusive and binding against both parties to the contract on all questions relating to the amount of work done and the compensation payable therefor, except as otherwise provided in Sections 9-1.03C, "Records," and 9-1.09, "Clerical Errors."

Failure of the Contractor to file claims in writing with the itemized invoice or to meet with the person designated by the District Director shall constitute a failure to pursue diligently and exhaust the administrative procedures in the contract and shall be a bar to arbitration in conformance with the requirements in Section 10240.2 of the California Public Contract Code.

Attention is directed to Section 9-1.10 ARBITRATION of the Standard Specifications in regard to the arbitration process.

5-1. 04 PUBLIC SAFETY

The Contractor shall provide for the safety of traffic and the public in conformance with the provisions in Section 7-1.09, "Public Safety," of the Standard Specifications and these special provisions.

The Contractor shall install temporary railing (Type K) between a lane open to public traffic and an excavation, obstacle or storage area when the following conditions exist:

A. Excavations**.—**The near edge of the excavation is 3.6 m or less from the edge of the lane, except:

   1. Excavations covered with sheet steel or concrete covers of adequate thickness to prevent accidental entry by traffic or the public.
   2. Excavations less than 0.3-m deep.
   3. Trenches less than 0.3-m wide for irrigation pipe or electrical conduit, or excavations less than 0.3-m in diameter.
   4. Excavations parallel to the lane for the purpose of pavement widening or reconstruction.
   5. Excavations in side slopes, where the slope is steeper than 1:4 (vertical:horizontal).
   6. Excavations protected by existing barrier or railing.

B. Temporarily Unprotected Permanent Obstacles**.—**The work includes the installation of a fixed obstacle together with a protective system, such as a sign structure together with protective railing, and the Contractor elects to install the obstacle prior to installing the protective system; or the Contractor, for the Contractor's convenience and with permission of the Engineer, removes a portion of an existing protective railing at an obstacle and does not replace such railing complete in place during the same day.

C. Storage Areas.—Material or equipment is stored within 3.6 m of the lane and the storage is not otherwise prohibited by the provisions of the Standard Specifications and these special provisions.

The approach end of temporary railing (Type K), installed in conformance with the provisions in this section "Public Safety" and in Section 7-1.09, "Public Safety," of the Standard Specifications, shall be offset a minimum of 4.6 m from the edge of the traffic lane open to public traffic. The temporary railing shall be installed on a skew toward the edge of the traffic lane of not more than 0.3-m transversely to 3 m longitudinally with respect to the edge of the traffic lane. If the 4.6-m minimum offset cannot be achieved, the temporary

railing shall be installed on the 10 to 1 skew to obtain the maximum available offset between the approach end of the railing and the edge of the traffic lane, and an array of temporary crash cushion modules shall be installed at the approach end of the temporary railing.

Temporary railing (Type K) shall conform to the provisions in Section 12-3.08, "Temporary Railing (Type K)," of the Standard Specifications. Temporary railing (Type K), conforming to the details shown on 1999 Standard Plan T3, may be used. Temporary railing (Type K) fabricated prior to January 1, 1993, and conforming to 1988 Standard Plan B11-30 may be used, provided the fabrication date is printed on the required Certificate of Compliance.

Temporary crash cushion modules shall conform to the provisions in "Temporary Crash Cushion Module" of these special provisions.

Except for installing, maintaining and removing traffic control devices, whenever work is performed or equipment is operated in the following work areas, the Contractor shall close the adjacent traffic lane unless otherwise provided in the Standard Specifications and these special provisions:

Approach Speed of Public Traffic (Posted Limit) (Kilometers Per Hour)	Work Areas
Over 72 (45 Miles Per Hour)	Within 1.8 m of a traffic lane but not on a traffic lane
56 to 72 (35 to 45 Miles Per Hour)	Within 0.9-m of a traffic lane but not on a traffic lane

The lane closure provisions of this section shall not apply if the work area is protected by permanent or temporary railing or barrier.

When traffic cones or delineators are used to delineate a temporary edge of a traffic lane, the line of cones or delineators shall be considered to be the edge of the traffic lane, however, the Contractor shall not reduce the width of an existing lane to less than 3 m without written approval from the Engineer.

When work is not in progress on a trench or other excavation that required closure of an adjacent lane, the traffic cones or portable delineators used for the lane closure shall be placed off of and adjacent to the edge of the traveled way. The spacing of the cones or delineators shall be not more than the spacing used for the lane closure.

Suspended loads or equipment shall not be moved nor positioned over public traffic or pedestrians.

Full compensation for conforming to the provisions in this section "Public Safety," including furnishing and installing temporary railing (Type K) and temporary crash cushion modules, shall be considered as included in the contract prices paid for the various items of work involved and no additional compensation will be allowed therefor.

5-1.05 TESTING

Testing of materials and work shall conform to the provisions in Section 6-3, "Testing," of the Standard Specifications and these special provisions.

Whenever the provisions of Section 6-3.01, "General," of the Standard Specifications refer to tests or testing, it shall mean tests to assure the quality and to determine the acceptability of the materials and work.

The Engineer will deduct the costs for testing of materials and work found to be unacceptable, as determined by the tests performed by the Department, and the costs for testing of material sources identified by the Contractor which are not used for the work, from moneys due or to become due to the Contractor. The amount deducted will be determined by the Engineer.

5-1.06 REMOVAL OF ASBESTOS AND HAZARDOUS SUBSTANCES

When the presence of asbestos or hazardous substances are not shown on the plans or indicated in the specifications and the Contractor encounters materials which the Contractor reasonably believes to be asbestos

or a hazardous substance as defined in Section 25914.1 of the Health and Safety Code, and the asbestos or hazardous substance has not been rendered harmless, the Contractor may continue work in unaffected areas reasonably believed to be safe. The Contractor shall immediately cease work in the affected area and report the condition to the Engineer in writing.

In conformance with Section 25914.1 of the Health and Safety Code, removal of asbestos or hazardous substances including exploratory work to identify and determine the extent of the asbestos or hazardous substance will be performed by separate contract.

If delay of work in the area delays the current controlling operation, the delay will be considered a right of way delay and the Contractor will be compensated for the delay in conformance with the provisions in Section 8-1.09, "Right of Way Delays," of the Standard Specifications

5-1.07 (BLANK)

5-1.08 SUBCONTRACTOR AND DVBE RECORDS

The Contractor shall maintain records of all subcontracts entered into with certified DVBE subcontractors and records of materials purchased from certified DVBE suppliers. The records shall show the name and business address of each DVBE subcontractor or vendor and the total dollar amount actually paid each DVBE subcontractor or vendor.

Upon completion of the contract, a summary of these records shall be prepared on Form CEM-2402 (S) and certified correct by the Contractor or the Contractor's authorized representative, and shall be furnished to the Engineer.

5-1. 086 PERFORMANCE OF DVBE SUBCONTRACTORS AND SUPPLIERS

The DVBEs listed by the Contractor in response to the provisions in Section 2-1.04, "Submission of DVBE Information," and Section 3, "Submission of DVBE Information and Award and Execution of Contract," of these special provisions, which are determined by the Department to be certified DVBEs, shall perform the work and supply the materials for which they are listed, unless the Contractor has received prior written authorization to perform the work with other forces or to obtain the materials from other sources.

Authorization to utilize other forces or sources of materials may be requested for the following reasons:

A. The listed DVBE, after having had a reasonable opportunity to do so, fails or refuses to execute a written contract, when the written contract, based upon the general terms, conditions, plans and specifications for the project, or on the terms of the subcontractor's or supplier's written bid, is presented by the Contractor.
B. The listed DVBE becomes bankrupt or insolvent.
C. The listed DVBE fails or refuses to perform the subcontract or furnish the listed materials.
D. The Contractor stipulated that a bond was a condition of executing a subcontract and the listed DVBE subcontractor fails or refuses to meet the bond requirements of the Contractor.
E. The work performed by the listed subcontractor is substantially unsatisfactory and is not in substantial conformance with the plans and specifications or the subcontractor is substantially delaying or disrupting the progress of the work.
F. The listed DVBE subcontractor is not licensed pursuant to the Contractor's License Law.
G. It would be in the best interest of the State.

The Contractor shall not be entitled to payment for the work or material unless it is performed or supplied by the listed DVBE or by other forces (including those of the Contractor) pursuant to prior written authorization of the Engineer.

5-1.09 SUBCONTRACTING

Attention is directed to the provisions in Section 8-1.01, "Subcontracting," of the Standard Specifications, Section 2, "Proposal Requirements and Conditions," and Section 3, "Submission of DVBE Information and Award and Execution of Contract," of these special provisions and these special provisions.

Pursuant to the provisions in Section 1777.1 of the Labor Code, the Labor Commissioner publishes and distributes a list of contractors ineligible to perform work as a subcontractor on a public works project. This list of debarred contractors is available from the Department of Industrial Relations web site at:

http://www.dir.ca.gov/dir/Labor_law/DLSE/Debar.html.

The DVBE information furnished under Section 2-1.04, \"Submission of DVBE Information,\" of these special provisions is in addition to the subcontractor information required to be furnished in Section 8-1.01, "Subcontracting," and Section 2-1.054, "Required Listing of Proposed Subcontractors," of the Standard Specifications.

Section 10115 of the Public Contract Code requires the Department to implement provisions to establish a goal for Disabled Veteran Business Enterprise (DVBE) participation in highway contracts that are State funded. As a part of this requirement:

A. No substitution of a DVBE subcontractor shall be made at any time without the written consent of the Department, and

B. If a DVBE subcontractor is unable to perform successfully and is to be replaced, the Contractor shall make good faith efforts to replace the original DVBE subcontractor with another DVBE subcontractor.

The provisions in Section 2-1.02, "Disabled Veteran Business Enterprise (DVBE)," of these special provisions that DVBEs shall be certified on the date bids are opened does not apply to DVBE substitutions after award of the contract.

5-1.10 PROMPT PROGRESS PAYMENT TO SUBCONTRACTORS

Attention is directed to the provisions in Sections 10262 and 10262.5 of the Public Contract Code and Section 7108.5 of the Business and Professions Code concerning prompt payment to subcontractors.

5-1.11 (Blank)

5-1.12 LAWS TO BE OBSERVED –

Section 7-1.01 of the Standard Spec shall be amended to read:

The Contractor shall keep fully informed of all existing and future State and Federal laws and County and Municipal ordinances and regulations which in any manner affect those engaged or employed in the work, the materials used in the work, or which in any way affect the conduct of the work, and of all such orders and decrees of bodies or tribunals having any jurisdiction or authority over the same. Contractor shall at all times observe and comply with, and shall cause all agents and employees to observe and comply with all such existing and future laws. Ordinances, regulations, orders and decrees of bodies or tribunals having any jurisdiction or authority over the work. The Contractor shall protect and indemnify the State of California, and all officers and employees thereof connected with the work against any claim, injury, or liability arising from or

based on the violation of any such law, ordinance, regulation, order, or decree, whether by the Contractor, a Subcontractor or any employee, If any discrepancy or inconsistency is discovered in the plans, drawings, specification, or contract for the work in relation to any such law, ordinance, regulation, order or decree, the Contractor shall immediately report the same to the Contract manager in writing.

5-1.13 INTERFACING WITH PEDESTRIAN AND VEHICULAR TRAFFIC

Pursuant to the authority contained in Section 591 of the Vehicle Code, the department has determined that within such areas as are within the limits of the project and are open to public traffic, the Contractor shall comply with all of the requirements set forth in Divisions 11, 12, 13, 14 and 15 of the Vehicle Code. The Contractor shall take all necessary precautions for safe operations of the Contractor's equipment and the protection of the public from injury and damage from such property.

5-1.14 RECYCLE CONTENT COMPLIANCE

The contractor's signature affixed hereon and dated shall constitute certification under the penalty of perjury under the laws of the State of California that the contractor has, unless exempted, complied with the recycle of services, materials, goods and supplies program requirements of California Public Contract Code Sections 12200, 12205 and 12161.

Recycle Certification is attached as Attachment B and is hereby incorporated and made a part of this contract by reference and attachment.

5-1.5 CHILD SUPPORT COMPLIANCE (Applicable in Contracts of $100,000 or more)

A. The contractor recognizes the importance of child and family support obligations and shall fully comply with all applicable state and federal laws relating to child and family support enforcement, including, but not limited to, disclosure of information and compliance with earnings assignment orders, as provided in Chapter 8, commencing with Section 5200, of Part 5 of Division 9 of the Family Code.

B. The contractor, to the best of its knowledge, is fully complying with the earnings assignment orders of all employees and is providing the names of all new employees to the New Hire Registry maintained by the California Employment Development Department.

5-1.16 LABOR CODE REQUIREMENTS

Attention is directed to Section 7-1.01A(1), "Hours of Labor" of the Standard Specifications.

The fourth paragraph of Section 7-1.01A(2), "Prevailing Wage," of the Standard Specifications is amended to read:

The general prevailing wage rates determined by the Director of Industrial Relations for in Solano County are available at: Department of Transportation, Labor Compliance Office,111 Grand Avenue, Oakland CA 94612, Telephone: (510) 286-5183. The wage rates are not included in the Proposal or Contract for the project. Changes, if any, in the general prevailing wage rates will be available at the same location or from the Department of Industrial Relations' Internet Web Site at: http://www.dir.ca.gov.

The fourth paragraph of Section 7-1.01A(3), "Payroll Records of the Standard Specifications is amended to read:

If by the time the Engineer receives a bill for work performed under the contract, the Contractor has not submitted satisfactory certified payroll records for the work performed, the Department will withhold all payments due and owing the contractor pending receipt of such records. Payroll records are not to be submitted if prevailing wages are not required as outlined in these special provisions.

5-1.17 WORKERS COMPENSATION

Section 7-1.01A(6) "Workers' Compensation" of the Standard Specifications is amended to read:

By my signature on this contract, as Contractor, I certify that I am aware of the provisions of Section 3700 of the Labor Code which require every employer to be insured against liability for workers' compensation or to undertake self insurance in accordance with the provisions of that code, and I will comply with such provisions before commencing the performance of the work of this contract.

5-1.18 PREVAILING WAGES NOT REQUIRED

Payment of prevailing wages is not required if the contract is for:

(a) $25,000 or less for public works construction project.
(b) $15,000 or less for the alteration, demolition, repair or maintenance of public works project.

5-1.19 RECORDS RETENTION CLAUSE

For the purpose of determining compliance with Public Contract Code Section 10115, et.seq. and Title 21, California Code of Regulations, Chapter 21, Section 2500 et.seq., when applicable, and other matters connected with the performance of the contract pursuant to Government Code Section 8546.7, the Contractor, subcontractors and the State shall maintain all books, documents, papers, accounting records, and other evidence pertaining to the performance of the contract, including but not limited to, the costs of administering the contract. All parties shall make such materials available at their respective offices at all reasonable times during the contract period for three years from the date of final payment under the contract. The State, the State Auditor, FHWA, or any duly authorized representative of the Federal government shall have access to any books, records, and documents of the Contractor that are pertinent to the contract for audits, examinations, excerpts, and transactions, and copies thereof shall be furnished if requested.

5-1.20 SPECIFIC STATUTORY REFERENCE

Any reference to certain statutes in this contract shall not relieve the Contractor from the responsibility of complying with all other statutes applicable to the service, work, or rental to be furnished thereunder.

5-1.21 EQUIPMENT INDEMNIFICATION

The Contractor shall indemnify the State against all loss and damage to the Contractor's property or equipment during its use under this contract and shall at the Contractor's own expense maintain such fire, theft, liability or other insurance as deemed necessary for this protection. The Contractor assumes all responsibility which may be imposed by law for property damage or personal injuries caused by defective equipment furnished under this contract or by operations of the Contractor or the Contractor's employees under this contract.

5-1.22 INCLUSIVE COSTS

The cost of employer payments to or on behalf of employees, subsistence, travel, compensation insurance premiums, unemployment contributions, social security taxes, contract bond premiums, and any other taxes or assessments INCLUDING SALES AND USE TAXES required by law or otherwise shall be included in the

price bid and no additional allowance will be made thereof, unless separate payment provision should specifically so provide.

5-1.23 NON-SOLICITATION

The Contractor warrants, by execution of this contract, that no person or selling agency has been employed or retained to solicit or secure this contract upon an agreement or understanding for a commission, percentage, brokerage, or contingent fee, excepting bona fide employees or bona fide established commercial or selling agencies maintained or contracted by the Contractor for the purpose of securing business. For breach or violation of this warranty, the State shall have the right to annul this contract without liability, paying only for the value of the work actually performed, or in its discretion, to deduct from the contract price or consideration, or otherwise recover, the full amount of such commission, percentage, brokerage or contingent fee.

5-1.24 COMPLIANCE WITH ORDERS OF THE NATIONAL LABOR RELATIONS BOARD

Standard Specification 2-1.108 “COMPLIANCE WITH ORDERS OF THE NATIONAL LABOR RELATIONS BOARD” amended to read:

In accordance with Public Contract Code Section 10296, a contractor who is not a public entity, by signing this contract, hereby swears under penalty of perjury that no more than one final unappealable finding of contempt of court by a federal court has been issued against the contractor within the immediately preceding two-year period because of the contractor’s failure to comply with an order of a federal court which orders the contractor to comply with an order of the National Labor Relations Board.

5-1.25 PARTIAL PAYMENT

Section 9-1.06 "Partial Payments" of the Standard Specifications is amended to read:

If the number of working days for this contract is more than 20, partial payment may be made to the Contractor from time to time during the progress of the work on the basis of the Engineer's written estimate.

The estimate will include the total amount of work done to the time of such estimate and the value thereof. The value of work done will not include the value of materials furnished but not incorporated in the work.

The Department will retain 10 percent of such estimated value of the work done as part security for the fulfillment of the contract by the Contractor.

The Department will pay monthly to the Contractor, while carrying on the work, the balance not retained, as aforesaid, after deducting therefrom all previous payments and all sums to be kept or retained under the provisions of the contract. No such estimate or payment will be required to be made when, in the judgment of the Engineer, the work is not proceeding in accordance with the provisions of the contract, or when the total value of the work done since the last estimate amounts to less than five thousand dollars ($5,000).

No such estimate or payment shall be construed to be an acceptance of any defective work or improper materials.

Attention is directed to the prohibitions and penalties pertaining to unlicensed contractors as provided in Business and Professions Code Sections 7028.15(a) and 7031.

5-1.26 FINAL BILL.

Upon completion of the work, a final bill in duplicate shall be submitted to the Resident Engineer.

5-1.27 CASH DISCOUNT

The State will honor cash discounts and will make payment to the Contractor in accordance with the cash discount terms specified on the invoice, provided requirements of the contract have been met. Discount must be a minimum of 1/2 of 1% of the amount due, but not less than $25.00. If no discount is offered, the invoice should so state.

5-1.28 BUDGET DISCLAIMER

A. It is mutually understood between the parties that this contract may have been written before ascertaining the availability of congressional or legislative appropriation of funds, for the mutual benefit of both parties in order to avoid program and fiscal delays that would occur if the agreement were executed after that determination was made.

B. This agreement is valid and enforceable only if sufficient funds are made available to the State by the United States Government or the California State Legislature, for the purpose of this program. In addition, this agreement is subject to any additional restrictions, limitations, conditions, or any statute enacted by the Congress or the State Legislature that may affect the provisions, terms, or funding of this contract in any manner.

C. It is mutually agreed that if the Congress or the State Legislature does not appropriate sufficient funds for the program, this contract shall be amended to reflect any reduction in funds.

D. The State has the option to void the contract under the 30-day cancellation clause or to amend the contract to reflect any reduction of funds.

5-1.29 RELIEF FROM MAINTENANCE AND RESPONSIBILITY

The following paragraph shall be added to Section 7-1.15 of the Standard Specifications:

The Engineer will only consider "Relief from Maintenance" requests on Minor Contracts when the Engineer has suspended the work pursuant to Section 8-1.05 "Temporary Suspension of Work."

5-1.30 TERMINATION OF CONTROL

If the control of the Contractor is terminated or he abandons the work, and the work is performed by day's labor or by another contract as provided above, he is not entitled to receive any portion of the amount to be paid under the contract until it is fully completed. After completion, if the unpaid balance exceeds the sum of the amount expended by the State in finishing the work, plus all damages sustained or to be sustained by the State, the excess not otherwise required by law to be retained shall be paid to the Contractor, but if such sum exceeds the unpaid balance, the Contractor and his surety are liable to the State for the excess. If the surety completes the contract work, as provided above, such surety shall be subrogated to money due under the contract, and to money which shall become due in the course of completion by the surety, to the extent provided by law.

On the completion of the contract, the original Contractor is entitled to the return of all his unused materials, and his equipment, tools and appliances, except that he shall have no claim on account of usual and ordinary depreciation, loss, and wear and tear.

5-1.31 AREAS FOR CONTRACTOR'S USE

Attention is directed to the provisions in Section 7-1.19, "Rights in Land and Improvements," of the Standard Specifications and these special provisions.

The highway right of way shall be used only for purposes that are necessary to perform the required work. The Contractor shall not occupy the right of way, or allow others to occupy the right of way, for purposes which are not necessary to perform the required work.

No State-owned parcels adjacent to the right of way are available for the exclusive use of the Contractor within the contract limits. The Contractor shall secure, at the Contractor's own expense, areas required for plant sites, storage of equipment or materials, or for other purposes.

No area is available within the contract limits for the exclusive use of the Contractor. However, temporary storage of equipment and materials on State property may be arranged with the Engineer, subject to the prior demands of State maintenance forces and to other contract requirements. Use of the Contractor's work areas and other State-owned property shall be at the Contractor's own risk, and the State shall not be held liable for damage to or loss of materials or equipment located within such areas.

5-1.32 SOUND CONTROL REQUIREMENTS

Sound control shall conform to the provisions in Section 7-1.01I, "Sound Control Requirements," of the Standard Specifications and these special provisions.

The noise level from the Contractor's operations, between the hours of 9:00 p.m. and 6:00 a.m., shall not exceed 86 dBa at a distance of 15 m. This requirement shall not relieve the Contractor from responsibility for complying with local ordinances regulating noise level.

The noise level requirement shall apply to the equipment on the job or related to the job, including but not limited to trucks, transit mixers or transient equipment that may or may not be owned by the Contractor. The use of loud sound signals shall be avoided in favor of light warnings except those required by safety laws for the protection of personnel.

SECTION 6. (BLANK)

SECTION 7. (BLANK)

SECTION 8. MATERIALS

SECTION 8-1. MISCELLANEOUS

8-1.01 SUBSTITUTION OF NON-METRIC MATERIALS AND PRODUCTS

Only materials and products conforming to the requirements of the specifications shall be incorporated in the work. When metric materials and products are not available, and when approved by the Engineer, and at no cost to the State, materials and products in the United States Standard Measures which are of equal quality and of the required properties and characteristics for the purpose intended, may be substituted for the equivalent metric materials and products, subject to the following provisions:

A. Materials and products shown on the plans or in the special provisions as being equivalent may be substituted for the metric materials and products specified or detailed on the plans.
B. Before other non-metric materials and products will be considered for use, the Contractor shall furnish, at the Contractor's expense, evidence satisfactory to the Engineer that the materials and products proposed for use are equal to or better than the materials and products specified or detailed on the plans. The burden of proof as to the quality and suitability of substitutions shall be upon the Contractor and the Contractor shall furnish necessary information as required by the Engineer. The Engineer will be the

sole judge as to the quality and suitability of the substituted materials and products and the Engineer's decision will be final.

C. When the Contractor elects to substitute non-metric materials and products, including materials and products shown on the plans or in the special provisions as being equivalent, the list of sources of material specified in Section 6-1.01, "Source of Supply and Quality of Materials," of the Standard Specification shall include a list of substitutions to be made and contract items involved. In addition, for a change in design or details, the Contractor shall submit plans and working drawings in conformance with the provisions in Section 5-1.02, "Plans and Working Drawings," of the Standard Specifications. The plans and working drawings shall be submitted at least 7 days before the Contractor intends to begin the work involved.

Unless otherwise specified, the following substitutions of materials and products will be allowed:

SUBSTITUTION TABLE FOR SIZES OF HIGH STRENGTH STEEL FASTENERS
ASTM Designation: A 325M

METRIC SIZE SHOWN ON THE PLANS mm x thread pitch	SIZE TO BE SUBSTITUTED inch
M16 x 2	5/8
M20 x 2.5	3/4
M22 x 2.5	7/8
M24 x 3	1
M27 x 3	1-1/8
M30 x 3.5	1-1/4
M36 x 4	1-1/2

SUBSTITUTION TABLE FOR PLAIN WIRE REINFORCEMENT
ASTM Designation: A 82

METRIC SIZE SHOWN ON THE PLANS mm^2	SIZE TO BE SUBSTITUTED $inch^2$ x 100
MW9	W1.4
MW10	W1.6
MW13	W2.0
MW15	W2.3
MW19	W2.9
MW20	W3.1
MW22	W3.5
MW25	W3.9, except W3.5 in piles only
MW26	W4.0
MW30	W4.7
MW32	W5.0
MW35	W5.4
MW40	W6.2
MW45	W6.5
MW50	W7.8
MW55	W8.5, except W8.0 in piles only
MW60	W9.3
MW70	W10.9, except W11.0 in piles only
MW80	W12.4
MW90	W14.0
MW100	W15.5

SUBSTITUTION TABLE FOR BAR REINFORCEMENT

METRIC BAR DESIGNATION NUMBER[1] SHOWN ON THE PLANS	BAR DESIGNATION NUMBER[2] TO BE SUBSTITUTED
10	3
13	4
16	5
19	6
22	7
25	8
29	9
32	10
36	11
43	14
57	18

[1]Bar designation numbers approximate the number of millimeters of the nominal diameter of the bars.
[2]Bar numbers are based on the number of eighths of an inch included in the nominal diameter of the bars.
No adjustment will be required in spacing or total number of reinforcing bars due to a difference in minimum yield strength between metric and non-metric bars.

SUBSTITUTION TABLE FOR SIZES OF:
(1) STEEL FASTENERS FOR GENERAL APPLICATIONS (ASTM Designation: A 307 or AASHTO Designation: M 314, Grade 36 or 55), and
(2) HIGH STRENGTH STEEL FASTENERS (ASTM Designation: A 325 or A 449)

METRIC SIZE SHOWN ON THE PLANS mm	SIZE TO BE SUBSTITUTED inch
6 or 6.35	1/4
8 or 7.94	5/16
10 or 9.52	3/8
11 or 11.11	7/16
13 or 12.70	1/2
14 or 14.29	9/16
16 or 15.88	5/8
19 or 19.05	3/4
22 or 22.22	7/8
24, 25, or 25.40	1
29 or 28.58	1-1/8
32 or 31.75	1-1/4
35 or 34.93	1-3/8
38 or 38.10	1-1/2
44 or 44.45	1-3/4
51 or 50.80	2
57 or 57.15	2-1/4
64 or 63.50	2-1/2
70 or 69.85	2-3/4
76 or 76.20	3
83 or 82.55	3-1/4
89 or 88.90	3-1/2
95 or 95.25	3-3/4
102 or 101.60	4

SUBSTITUTION TABLE FOR NOMINAL THICKNESS OF SHEET METAL

UNCOATED HOT AND COLD ROLLED SHEETS		HOT-DIPPED ZINC COATED SHEETS (GALVANIZED)	
METRIC THICKNESS SHOWN ON THE PLANS mm	GAGE TO BE SUBSTITUTED inch	METRIC THICKNESS SHOWN ON THE PLANS mm	GAGE TO BE SUBSTITUTED inch
7.94	0.3125	4.270	0.1681
6.07	0.2391	3.891	0.1532
5.69	0.2242	3.510	0.1382
5.31	0.2092	3.132	0.1233
4.94	0.1943	2.753	0.1084
4.55	0.1793	2.372	0.0934
4.18	0.1644	1.994	0.0785
3.80	0.1495	1.803	0.0710
3.42	0.1345	1.613	0.0635
3.04	0.1196	1.461	0.0575
2.66	0.1046	1.311	0.0516
2.28	0.0897	1.158	0.0456
1.90	0.0747	1.006 or 1.016	0.0396
1.71	0.0673	0.930	0.0366
1.52	0.0598	0.853	0.0336
1.37	0.0538	0.777	0.0306
1.21	0.0478	0.701	0.0276
1.06	0.0418	0.627	0.0247
0.91	0.0359	0.551	0.0217
0.84	0.0329	0.513	0.0202
0.76	0.0299	0.475	0.0187
0.68	0.0269	--------	--------
0.61	0.0239	--------	--------
0.53	0.0209	--------	--------
0.45	0.0179	--------	--------
0.42	0.0164	--------	--------
0.38	0.0149	--------	--------

SUBSTITUTION TABLE FOR WIRE

METRIC THICKNESS SHOWN ON THE PLANS mm	WIRE THICKNESS TO BE SUBSTITUTED inch	GAGE NO.
6.20	0.244	3
5.72	0.225	4
5.26	0.207	5
4.88	0.192	6
4.50	0.177	7
4.11	0.162	8
3.76	0.148	9
3.43	0.135	10
3.05	0.120	11
2.69	0.106	12
2.34	0.092	13
2.03	0.080	14
1.83	0.072	15
1.57	0.062	16
1.37	0.054	17
1.22	0.048	18
1.04	0.041	19
0.89	0.035	20

SUBSTITUTION TABLE FOR PIPE PILES

METRIC SIZE SHOWN ON THE PLANS mm x mm	SIZE TO BE SUBSTITUTED inch x inch
PP 360 x 4.55	NPS 14 x 0.179
PP 360 x 6.35	NPS 14 x 0.250
PP 360 x 9.53	NPS 14 x 0.375
PP 360 x 11.12	NPS 14 x 0.438
PP 406 x 12.70	NPS 16 x 0.500
PP 460 x T	NPS 18 x T"
PP 508 x T	NPS 20 x T"
PP 559 x T	NPS 22 x T"
PP 610 x T	NPS 24 x T"
PP 660 x T	NPS 26 x T"
PP 711 x T	NPS 28 x T"
PP 762 x T	NPS 30 x T"
PP 813 x T	NPS 32 x T"
PP 864 x T	NPS 34 x T"
PP 914 x T	NPS 36 x T"
PP 965 x T	NPS 38 x T"
PP 1016 x T	NPS 40 x T"
PP 1067 x T	NPS 42 x T"
PP 1118 x T	NPS 44 x T"
PP 1219 x T	NPS 48 x T"
PP 1524 x T	NPS 60 x T"

The thickness in millimeters (T) represents an exact conversion of the thickness in inches (T").

SUBSTITUTION TABLE FOR STRUCTURAL TIMBER AND LUMBER

METRIC MINIMUM DRESSED DRY, SHOWN ON THE PLANS mm x mm	METRIC MINIMUM DRESSED GREEN, SHOWN ON THE PLANS mm x mm	NOMINAL SIZE TO BE SUBSTITUTED inch x inch
19x89	20x90	1x4
38x89	40x90	2x4
64x89	65x90	3x4
89x89	90x90	4x4
140x140	143x143	6x6
140x184	143x190	6x8
184x184	190x190	8x8
235x235	241x241	10x10
286x286	292x292	12x12

SUBSTITUTION TABLE FOR NAILS AND SPIKES

METRIC COMMON NAIL, SHOWN ON THE PLANS Length, mm Diameter, mm	METRIC BOX NAIL, SHOWN ON THE PLANS Length, mm Diameter, mm	METRIC SPIKE, SHOWN ON THE PLANS Length, mm Diameter, mm	SIZE TO BE SUBSTITUTED Penny-weight
50.80 2.87	50.80 2.51	_____	6d
63.50 3.33	63.50 2.87	_____	8d
76.20 3.76	76.20 3.25	76.20 4.88	10d
82.55 3.76	82.55 3.25	82.55 4.88	12d
88.90 4.11	88.90 3.43	88.90 5.26	16d
101.60 4.88	101.60 3.76	101.60 5.72	20d
114.30 5.26	114.30 3.76	114.30 6.20	30d
127.00 5.72	127.00 4.11	127.00 6.68	40d
_____	_____	139.70 7.19	50d
_____	_____	152.40 7.19	60d

SUBSTITUTION TABLE FOR IRRIGATION COMPONENTS

METRIC WATER METERS, TRUCK LOADING STANDPIPES, VALVES, BACKFLOW PREVENTERS, FLOW SENSORS, WYE STRAINERS, FILTER ASSEMBLY UNITS, PIPE SUPPLY LINES, AND PIPE IRRIGATION SUPPLY LINES SHOWN ON THE PLANS DIAMETER NOMINAL (DN) mm	NOMINAL SIZE TO BE SUBSTITUTED inch
15	1/2
20	3/4
25	1
32	1-1/4
40	1-1/2
50	2
65	2-1/2
75	3
100	4
150	6
200	8
250	10
300	12
350	14
400	16

Unless otherwise specified, substitutions of United States Standard Measures standard structural shapes corresponding to the metric designations shown on the plans and in conformance with the requirements in ASTM Designation: A 6/A 6M, Annex 2, will be allowed.

8-1.__ PREQUALIFIED AND TESTED SIGNING AND DELINEATION MATERIALS

The Department maintains the following list of Prequalified and Tested Signing and Delineation Materials. The Engineer shall not be precluded from sampling and testing products on the list of Prequalified and Tested Signing and Delineation Materials.

The manufacturer of products on the list of Prequalified and Tested Signing and Delineation Materials shall furnish the Engineer a Certificate of Compliance in conformance with the provisions in Section 6-1.07, "Certificates of Compliance," of the Standard Specifications for each type of traffic product supplied.

For those categories of materials included on the list of Prequalified and Tested Signing and Delineation Materials, only those products shown within the listing may be used in the work. Other categories of products, not included on the list of Prequalified and Tested Signing and Delineation Materials, may be used in the work provided they conform to the requirements of the Standard Specifications.

Materials and products may be added to the list of Prequalified and Tested Signing and Delineation Materials if the manufacturer submits a New Product Information Form to the New Product Coordinator at the Transportation Laboratory. Upon a Departmental request for samples, sufficient samples shall be submitted to

permit performance of required tests. Approval of materials or products will depend upon compliance with the specifications and tests the Department may elect to perform.

PAVEMENT MARKERS, PERMANENT TYPE

Retroreflective With Abrasion Resistant Surface (ARS)

A. Apex, Model 921AR (100 mm x 100 mm)
B. Avery Dennison (formerly Stimsonite), Models C88 (100 mm x 100 mm), 911 (100 mm x 100 mm) and 953 (70 mm x 114 mm)
C. Ray-O-Lite, Model "AA" ARS (100 mm x 100 mm)
D. 3M Series 290 (89 mm x 100 mm)
E. 3M Series 290 PSA, with pressure sensitive adhesive pad (89 mm x 100 mm)

Retroreflective With Abrasion Resistant Surface (ARS)

(for recessed applications only)

A. Avery Dennison (formerly Stimsonite), Model 948 (58 mm x 119 mm)
B. Avery Dennison (formerly Stimsonite), Model 944SB (51 mm x 100 mm)*
C. Ray-O-Lite, Model 2002 (58 mm x 117 mm)
D. Ray-O-Lite, Model 2004 ARS (51 mm x 100 mm)*

*For use only in 114 mm wide (older) recessed slots

Non-Reflective, 100 mm Round

A. Alpine Products, "D-Dot" and "ANR" (ABS)
B. Apex Universal (Ceramic)
C. Apex Universal, Models 929 (ABS) and 929PP (Polypropylene)
D. Elgin Molded Plastics, "Empco-Lite" Model 900 (ABS)
E. Hi-Way Safety, Inc., Models P20-2000W and 2001Y (ABS)
F. Interstate Sales, "Diamond Back" (ABS) and (Polypropylene)
G. Novabrite Models Cdot (White) Cdot-y (Yellow), Ceramic
H. Novabrite Models Adot-w (White) Adot-y (Yellow), (ABS)
I. Novabrite Models Pdot-w (White) Pdot-y (Yellow), Polypropylene
J. Road Creations, Model RCB4NR (Acrylic)
K. Three D Traffic Works TD10000 (ABS), TD10500 (Polypropylene)
L. Zumar Industries, "Titan TM40A" (ABS)

PAVEMENT MARKERS, TEMPORARY TYPE

Temporary Markers For Long Term Day/Night Use (6 months or less)

A. Apex Universal, Model 924 (100 mm x 100 mm)
B. Elgin Molded Plastics, "Empco-Lite" Model 901 (100 mm x 100 mm)
C. Road Creations, Model R41C (100 mm x 100 mm)
D. Vega Molded Products "Temporary Road Marker" (75 mm x 100 mm)

Temporary Markers For Short Term Day/Night Use (14 days or less)

(For seal coat or chip seal applications, clear protective covers are required)

A. Apex Universal, Model 932
B. Bunzl Extrusion, Models T.O.M., T.R.P.M., and "HH" (High Heat)
C. Hi-Way Safety, Inc., Model 1280/1281

STRIPING AND PAVEMENT MARKING MATERIAL

Permanent Traffic Striping and Pavement Marking Tape

A. Advanced Traffic Marking, Series 300 and 400
B. Brite-Line, Series 1000
C. Brite-Line, "DeltaLine XRP"
D. Swarco Industries, "Director 35" (For transverse application only)
E. Swarco Industries, "Director 60"
F. 3M, "Stamark" Series 380 and 5730
G. 3M, "Stamark" Series 420 (For transverse application only)

Temporary (Removable) Striping and Pavement Marking Tape (6 months or less)

A. Advanced Traffic Marking, Series 200
B. Brite-Line, Series 100
C. Garlock Rubber Technologies, Series 2000
D. P.B. Laminations, Aztec, Grade 102
E. Swarco Industries, "Director-2"
F. Trelleborg Industri, R140 Series
G. 3M, Series 620 "CR", and Series A750
H. 3M, Series A145, Removable Black Line Mask
(Black Tape: for use only on Asphalt Concrete Surfaces)
I. Advanced Traffic Marking Black "Hide-A-Line"
(Black Tape: for use only on Asphalt Concrete Surfaces)
J. Brite-Line "BTR" Black Removable Tape
(Black Tape: for use only on Asphalt Concrete Surfaces)
K. Trelleborg Industri, RB-140
(Black Tape: for use only on Asphalt Concrete Surfaces)

Preformed Thermoplastic (Heated in place)

A. Avery Dennison, "Hotape"
B. Flint Trading, "Premark," "Premark 20/20 Flex," and "Premark 20/20 Flex Plus"

Ceramic Surfacing Laminate, 150 mm x 150 mm

A. Safeline Industries/Highway Ceramics, Inc.

CLASS 1 DELINEATORS

One Piece Driveable Flexible Type, 1700 mm

A. Bunzl Extrusion, "Flexi-Guide Models 400 and 566"
B. Carsonite, Curve-Flex CFRM-400
C. Carsonite, Roadmarker CRM-375
D. FlexStake, Model 654 TM
E. GreenLine Models HWD1-66 and CGD1-66
F. J. Miller Industries, Model JMI-375 (with soil anchor)

Special Use Type, 1700 mm

A. Bunzl Extrusion, Model FG 560 (with 450 mm U-Channel base)

B. Carsonite, "Survivor" (with 450 mm U-Channel base)
C. Carsonite, Roadmarker CRM-375 (with 450 mm U-Channel base)
D. FlexStake, Model 604
E. GreenLine Models HWDU and CGD (with 450 mm U-Channel base)
F. Impact Recovery Model D36, with #105 Driveable Base
G. Safe-Hit with 200 mm pavement anchor (SH248-GP1)
H. Safe-Hit with 380 mm soil anchor (SH248-GP2) and with 450 mm soil anchor (SH248-GP3)

Surface Mount Type, 1200 mm

A. Bent Manufacturing Company, Masterflex Model MF-180EX-48
B. Carsonite, "Super Duck II"
C. FlexStake, Surface Mount, Models 704 and 754 TM
D. Impact Recovery Model D48, with #101 Fixed (Surface-Mount) Base
E. Three D Traffic Works "Channelflex" Part No. 522248W

CHANNELIZERS

Surface Mount Type, 900 mm

A. Bent Manufacturing Company, Masterflex Models MF-360-36 (Round) and MF-180-36 (Flat)
B. Bunzl Extrusion, Flexi-Guide Models FG300LD and FG300UR
C. Carsonite, "Super Duck" (Flat SDF-436, Round SDR-336)
D. Carsonite, "Super Duck II" Model SDCF203601MB "The Channelizer"
E. FlexStake, Surface Mount, Models 703 and 753 TM
F. GreenLine, Model SMD-36
G. Hi-Way Safety, Inc. "Channel Guide Channelizer" Model CGC36
H. Impact Recovery Model D36, with #101 Fixed (Surface-Mount) Base
I. Repo, Models 300 and 400
J. Safe-Hit, Guide Post, Model SH236SMA
K. The Line Connection, "Dura-Post" Model DP36-3 (Permanent)
L. The Line Connection, "Dura-Post" Model DP36-3C (Temporary)
M. Three D Traffic Works "Channelflex" Part No. 522053W

Lane Separation System

A. Bunzl "Flexi-Guide (FG) 300 Curb System"
B. Qwick Kurb, "Klemmfix Guide System"
C. Recycled Technology, Inc. "Safe-Lane System"

CONICAL DELINEATORS, 1070 mm

(For 700 mm Traffic Cones, see Standard Specifications)

A. Bent Manufacturing Company "T-Top"
B. Plastic Safety Systems "Navigator-42"
C. Radiator Specialty Company "Enforcer"
D. Roadmaker Company "Stacker"
E. TrafFix Devices "Grabber"

OBJECT MARKERS

Type "K", 450 mm

A. Bunzl, Model FG318PE

B. Carsonite, Model SMD 615
C. FlexStake, Model 701 KM
D. Repo, Models 300 and 400
E. Safe-Hit, Model SH718SMA
F. The Line Connection, Model DP21-4K

Type "K-4" / "Q" Object Markers, 600 mm

A. Bent Manufacturing "Masterflex" Model MF-360-24
B. Bunzl Extrusion, Model FG324PE
C. Carsonite, Super Duck II
D. FlexStake, Model 701KM
E. Repo, Models 300 and 400
F. Safe-Hit, Models SH8 24SMA_WA and SH8 24GP3_WA
G. The Line Connection, Model DP21-4Q
H. Three D Traffic Works "Q" Marker, Part No. 531702W

CONCRETE BARRIER MARKERS AND
TEMPORARY RAILING (TYPE K) REFLECTORS

Impactable Type

A. ARTUK, "FB"
B. Bunzl Extrusion, Models PCBM-12 and PCBM-T12
C. Duraflex Corp., "Flexx 2020" and "Electriflexx"
D. Hi-Way Safety, Inc., Model GMKRM100
E. Plastic Safety Systems "BAM" Models OM-BARR and OM-BWAR
F. Sun-Lab Technology, "Safety Guide Light Model TM-5"
G. Three D Traffic Works "Roadguide" TD9000 Series

Non-Impactable Type

A. ARTUK, JD Series
B. Plastic Safety Systems "BAM" Models OM-BITARW and OM-BITARA
C. Vega Molded Products, Models GBM and JD

THRIE BEAM BARRIER MARKERS
(For use to the left of traffic)
A. Bunzl Extrusion, "Mini" (75 mm x 254 mm)
B. Duraflex Corp., "Railrider"

CONCRETE BARRIER DELINEATORS, 400 mm
(For use to the right of traffic)
A. Bunzl Extrusion, Model PCBM T-16
B. Safe-Hit, Model SH216RBM
C. Sun-Lab Technology, "Safety Guide Light, Model TM16," (75 mm x 300 mm)
D. Three D Traffic Works "Roadguide" TD9416 Series

CONCRETE BARRIER-MOUNTED MINI-DRUM (260 mm x 360 mm x 570 mm)
A. Stinson Equipment Company "SaddleMarker"

SOUND WALL DELINEATOR
(Applied vertically. Place top of 75 mm x 300 mm reflective element at 1200 mm above roadway)
A. Bunzl Extrusion, PCBM S-36
B. Sun-Lab Technology, "Safety Guide Light, Model SM12," (75 mm x 300 mm)

GUARD RAILING DELINEATOR
(Place top of reflective element at 1200 mm above plane of roadway)

Wood Post Type, 686 mm

A. Bunzl Extrusion, FG 427 and FG 527
B. Carsonite, Model 427
C. FlexStake, Model 102 GR
D. GreenLine GRD 27
E. J. Miller Model JMI-375G
F. Safe-Hit, Model SH227GRD
G. Three D Traffic Works "Guardflex" TD5100 Series

Steel Post Type

A. Carsonite, Model CFGR-327 with CFGRBK300 Mounting Bracket

RETROREFLECTIVE SHEETING

Channelizers, Barrier Markers, and Delineators

A. Avery Dennison T-6500 Series (Formerly Stimsonite, Series 6200) (For rigid substrate devices only)
B. Avery Dennison WR-6100 Series
C. Nippon Carbide, Flexible Ultralite Grade (ULG) II
D. Reflexite, PC-1000 Metalized Polycarbonate
E. Reflexite, AC-1000 Acrylic
F. Reflexite, AP-1000 Metalized Polyester
G. Reflexite, Conformalight, AR-1000 Abrasion Resistant Coating
H. 3M, High Intensity

Traffic Cones, 330 mm Sleeves

A. Reflexite SB (Polyester), Vinyl or "TR" (Semi-transparent)

Traffic Cones, 100 mm and 150 mm Sleeves

A. Nippon Carbide, Flexible Ultralite Grade (ULG) II
B. Reflexite, Vinyl, "TR" (Semi-transparent) or "Conformalight"
C. 3M Series 3840

Barrels and Drums

A. Avery Dennison WR-6100
B. Nippon Carbide, Flexible Ultralite Grade (ULG) II
C. Reflexite, “Conformalight”, "Super High Intensity" or "High Impact Drum Sheeting"
D. 3M Series 3810

Barricades: Type I, Medium-Intensity (Typically Enclosed Lens, Glass-Bead Element)

A. American Decal, Adcolite

B. Avery Dennison, T-1500 and T-1600 series
C. 3M Engineer Grade, Series 3170

Barricades: Type II, Medium-High-Intensity (Typically Enclosed Lens, Glass-Bead Element)

A. Avery Dennison, T-2500 Series
B. Kiwalite Type II
C. Nikkalite 1800 Series

Signs: Type II, Medium-High-Intensity (Typically Enclosed Lens, Glass-Bead Element)

A. Avery Dennison, T-2500 Series
B. Kiwalite, Type II
C. Nikkalite 1800 Series

Signs: Type III, High-Intensity (Typically Encapsulated Glass-Bead Element)

A. Avery Dennison, T-5500 Series
B. Nippon Carbide, Nikkalite Brand Ultralite Grade II
C. 3M Series 3870

Signs: Type IV, High-Intensity (Typically Unmetallized Microprismatic Element)

A. Avery Dennison, T-6500 Series (Formerly Stimsonite Series 6200)
B. Nippon Carbide, Crystal Grade, 94000 Series

Signs: Type VI, Elastomeric (Roll-Up) High-Intensity, without Adhesive

A. Avery Dennison, WU-6014 (Fluorescent orange)
B. Novabrite LLC, "Econobrite"
C. Reflexite "Vinyl" (Orange)
D. Reflexite "SuperBright" (Fluorescent orange)
E. Reflexite "Marathon" (Fluorescent orange)
F. 3M Series RS34 (Orange) and RS20 (Fluorescent orange)

Signs: Type VII, Super-High-Intensity (Typically Unmetallized Microprismatic Element)

A. 3M LDP Series 3970

Signs: Type VIII, Super-High-Intensity (Typically Unmetallized Microprismatic Element)

A. Avery Dennison, T-7500 Series

Signs: Type IX, Very-High-Intensity (Typically Unmetallized Microprismatic Element)

A. 3M VIP Series 3990 Diamond Grade

SPECIALTY SIGNS

A. All Sign Products, STOP Sign (All Plastic), 750 mm
B. Relexite "Endurance" Work Zone Sign (with Semi-Rigid Plastic Substrate)

SIGN SUBSTRATE

Fiberglass Reinforced Plastic (FRP)

A. Fiber-Brite
B. Sequentia, "Polyplate"
C. Inteplast Group "InteCel" (13 mm for Post-Mounted CZ Signs, 1200 mm or less)

Aluminum Composite

A. Alcan Composites "Dibond Material, 2 mm"
B. Mitsubishi Chemical America, Alpolic 350

8-1.__ STATE-FURNISHED MATERIALS

Attention is directed to Section 6-1.02, "State-Furnished Materials," of the Standard Specifications and these special provisions.

Padlocks for walk gates, will be furnished to the Contractor.

SECTION 8-2. CONCRETE

8-2.__ PORTLAND CEMENT CONCRETE

Portland cement concrete shall conform to the provisions in Section 90, "Portland Cement Concrete," of the Standard Specifications and these special provisions.

References to Section 90-2.01, "Portland Cement," of the Standard Specifications shall mean Section 90-2.01, "Cement," of the Standard Specifications.

Mineral admixture shall be combined with cement in conformance with the provisions in Section 90-4.08, "Required Use of Mineral Admixtures," of the Standard Specifications for the concrete materials specified in Section 56-2, "Roadside Signs," of the Standard Specifications.

The requirements of Section 90-4.08, "Required Use of Mineral Admixture," of the Standard Specifications shall not apply to Section 19-3.025C, "Soil Cement Bedding," of the Standard Specifications.

The Department maintains a list of sources of fine and coarse aggregate that have been approved for use with a reduced amount of mineral admixture in the total amount of cementitious material to be used. A source of aggregate will be considered for addition to the approved list if the producer of the aggregate submits to the Transportation Laboratory certified test results from a qualified testing laboratory that verify the aggregate complies with the requirements. Prior to starting the testing, the aggregate test shall be registered with the Department. A registration number can be obtained by calling (916) 227-7228. The registration number shall be used as the identification for the aggregate sample in correspondence with the Department. Upon request, a split of the tested sample shall be provided to the Department. Approval of aggregate will depend upon compliance with the specifications, based on the certified test results submitted, together with any replicate testing the Department may elect to perform. Approval will expire 3 years from the date the most recent registered and evaluated sample was collected from the aggregate source.

Qualified testing laboratories shall conform to the following requirements:

A. Laboratories performing ASTM Designation: C 1293 shall participate in the Cement and Concrete Reference Laboratory (CCRL) Concrete Proficiency Sample Program and shall have received a score of 3 or better on all tests of the previous 2 sets of concrete samples.

B. Laboratories performing ASTM Designation: C 1260 shall participate in the Cement and Concrete Reference Laboratory (CCRL) Pozzolan Proficiency Sample Program and shall have received a score of 3 or better on the shrinkage and soundness tests of the previous 2 sets of pozzolan samples.

Aggregates on the list shall conform to one of the following requirements:

A. When the aggregate is tested in conformance with the requirements in California Test 554 and ASTM Designation: C 1293, the average expansion at one year shall be less than or equal to 0.040 percent; or
B. When the aggregate is tested in conformance with the requirements in California Test 554 and ASTM Designation: C 1260, the average of the expansion at 16 days shall be less than or equal to 0.15 percent.

The amounts of cement and mineral admixture used in cementitious material shall be sufficient to satisfy the minimum cementitious material content requirements specified in Section 90-1.01, "Description," or Section 90-4.05, "Optional Use of Chemical Admixtures," of the Standard Specifications and shall conform to the following:

A. The minimum amount of cement shall not be less than 75 percent by mass of the specified minimum cementitious material content.
B. The minimum amount of mineral admixture to be combined with cement shall be determined using one of the following criteria:

    1. When the calcium oxide content of a mineral admixture is equal to or less than 2 percent by mass, the amount of mineral admixture shall not be less than 15 percent by mass of the total amount of cementitious material to be used in the mix.
    2. When the calcium oxide content of a mineral admixture is greater than 2 percent by mass, and any of the aggregates used are not listed on the approved list as specified in these special provisions, then the amount of mineral admixture shall not be less than 25 percent by mass of the total amount of cementitious material to be used in the mix.
    3. When the calcium oxide content of a mineral admixture is greater than 2 percent by mass and the fine and coarse aggregates are listed on the approved list as specified in these special provisions, then the amount of mineral admixture shall not be less than 15 percent by mass of the total amount of cementitious material to be used in the mix.
    4. When a mineral admixture that conforms to the provisions for silica fume in Section 90-2.04, "Admixture Materials," of the Standard Specifications is used, the amount of mineral admixture shall not be less than 10 percent by mass of the total amount of cementitious material to be used in the mix.
    5. When a mineral admixture that conforms to the provisions for silica fume in Section 90-2.04, "Admixture Materials," of the Standard Specifications is used and the fine and coarse aggregates are listed on the approved list as specified in these special provisions, then the amount of mineral admixture shall not be less than 7 percent by mass of the total amount of cementitious material to be used in the mix.

C. The total amount of mineral admixture shall not exceed 35 percent by mass of the total amount of cementitious material to be used in the mix. Where Section 90-1.01, "Description," of the Standard Specifications specifies a maximum cementitious content in kilograms per cubic meter, the total mass of cement and mineral admixture per cubic meter shall not exceed the specified maximum cementitious material content.

SECTION 8-3. WELDING

8-3.__ WELDING

GENERAL

Flux core welding electrodes conforming to the requirements of AWS A5.20 E6XT-4 or E7XT-4 shall not be used to perform welding for this project.

Wherever reference is made to the following AWS welding codes in the Standard Specifications, on the plans, or in these special provisions, the year of adoption for these codes shall be as listed:

AWS Code	Year of Adoption
D1.1	2000
D1.4	1998
D1.5	1995
D1.5 (metric only)	1996

Requirements of the AWS welding codes shall apply unless specified otherwise in the Standard Specifications, on the plans, or in these special provisions. Wherever the abbreviation AWS is used, it shall be equivalent to the abbreviations ANSI/AWS or ANSI/AASHTO/AWS.

Sections 6.1.2 through 6.1.4.3 of AWS D 1.1, Sections 7.1.1 and 7.1.2 of AWS D 1.4, and Sections 6.1.1.1 through 6.1.3.3 of AWS D 1.5 are replaced with the following:

Quality Control (QC) shall be the responsibility of the Contractor. As a minimum, the Contractor shall perform inspection and testing of each weld joint prior to welding, during welding, and after welding as specified in this section and as necessary to ensure that materials and workmanship conform to the requirements of the contract documents.

The QC Inspector shall be the duly designated person who acts for and on behalf of the Contractor for inspection, testing, and quality related matters for all welding.

Quality Assurance (QA) is the prerogative of the Engineer. The QA Inspector is the duly designated person who acts for and on behalf of the Engineer.

The QC Inspector shall be responsible for quality control acceptance or rejection of materials and workmanship, and shall be currently certified as an AWS Certified Welding Inspector (CWI) in conformance with the requirements in AWS QC1, "Standard and Guide for Qualification of Welding Inspectors."

The QC Inspector may be assisted by an Assistant QC Inspector provided that this individual is currently certified as an AWS Certified Associate Welding Inspector (CAWI) in conformance with the requirements in AWS QC1, "Standard and Guide for Qualification of Welding Inspectors," or has equivalent qualifications. The QC Inspector shall monitor the Assistant QC Inspector's work, and shall be responsible for signing all reports.

When the term "Inspector" is used without further qualification, it shall refer to the QC Inspector.

Section 6.14.6, "Personnel Qualification," of AWS D 1.1, Section 7.7.6, "Personnel Qualification," of AWS D 1.4, and Section 6.1.3.4, "Personnel Qualification," of AWS D 1.5 are replaced with the following:

Personnel performing nondestructive testing (NDT) shall be qualified and certified in conformance with the requirements of the American Society for Nondestructive Testing (ASNT) Recommended Practice No. SNT-TC-1A and the Written Practice of the NDT firm. The Written Practice of the NDT firm shall meet or

exceed the guidelines of the ASNT Recommended Practice No. SNT-TC-1A. Only individuals who are 1) certified as an NDT Level II, or 2) Level III technicians who hold a current ASNT Level III certificate in that discipline and are authorized and certified to perform the work of Level II technicians, shall perform NDT, review the results, and prepare the written reports.

Section 6.5.4, "Scope of Examination," of AWS D 1.1 and Section 7.5.4 of AWS D 1.4 are replaced with the following:

The QC Inspector shall inspect and approve each joint preparation, assembly practice, welding technique, and the performance of each welder, welding operator, and tack welder to make certain that the applicable requirements of this code and the approved welding procedure specification (WPS) are met.

Section 6.5.4 of AWS D 1.5 is replaced with the following:

The QC Inspector shall inspect and approve each joint preparation, assembly practice, welding technique, and the performance of each welder, welding operator, and tack welder to make certain that the applicable requirements of this code and the approved WPS are met. The QC Inspector shall examine the work to make certain that it meets the requirements of Sections 3 and 9.21. The size and contour of all welds shall be measured using suitable gages. Visual inspection for cracks in welds and base metal, and for other discontinuities should be aided by strong light magnifiers, or such other devices as may be helpful. Acceptance criteria different from those specified in this code may be used when approved by the Engineer.

Section 6.6.5, "Nonspecified Nondestructive Testing Other Than Visual," of AWS D 1.1, Section 6.6.5 of AWS D 1.4 and Section 6.6.5 of AWS D 1.5 shall not apply.

For any welding, the Engineer may direct the Contractor to perform NDT that is in addition to the visual inspection or NDT specified in the AWS welding codes, in the Standard Specifications, or in these special provisions. Additional NDT required by the Engineer, will be paid for as extra work as provided in Section 4-1.03D, "Extra Work," of the Standard Specifications. Should any welding deficiencies be discovered by this additional NDT, the cost of the testing will not be paid for as extra work but shall be at the Contractor's expense.

Required repair work to correct welding deficiencies, whether discovered by the required visual inspection or NDT, or by additional NDT directed by the Engineer, and any associated delays or expenses caused to the Contractor by performing these repairs, shall be at the Contractor's expense.

The Engineer shall have the authority to verify the qualifications or certifications of any welder, QC Inspector, or NDT personnel to specified levels by retests or other means.

A sufficient number of QC Inspectors shall be provided to ensure continuous inspection when any welding is being performed. Continuous inspection, as a minimum, shall include (1) having QC Inspectors continually present on the shop floor or project site when any welding operation is being performed, and (2) having a QC Inspector within such close proximity of all welding operations so that inspections by the QC Inspector of each operation, at each welding location, shall not lapse for a period exceeding 30 minutes.

Inspection and approval of all joint preparations, assembly practices, welding techniques, and the performance of each welder, welding operator, and tack welder shall be documented by the QC Inspector on a daily basis for each day that welding is performed. The QC Inspector shall confirm and document compliance with the requirements of the AWS code criteria and the requirements of these special provisions on all weld joints before welding, during welding, and after the completion of each weld.

When joint details that are not prequalified by the applicable AWS codes are proposed for use in the work, welders using these details shall perform a qualification test plate using the approved WPS variables and the

joint detail to be used in production. The test plate shall be the maximum thickness to be used in production. The test plate shall be mechanically or radiographically tested as directed by the Engineer. Mechanical and radiographic testing and acceptance criteria shall be as specified in the applicable AWS codes.

The period of effectiveness for a welder's or welding operator's qualification shall be a maximum of 3 years for the same weld process, welding position, and weld type. A valid qualification at the beginning of work on a contract will be acceptable for the entire period of the contract, as long as the welder's work remains satisfactory.

10-1.01 Order of Work

Order of work shall conform to the provisions in Section 5-1.05, "Order of Work," of the Standard Specifications and these special provisions.

Attention is directed to “Initial Site Inspection” of these special provisions regarding checking for deficiencies of existing planting areas, prior to the start of roadside clearing and establish existing planting work.

Some plants required for this project may not be readily available and may have to be grown specifically for this project. Within 30 days after the contract has been approved, the Contractor shall furnish the Engineer a statement from the vendor that the order for the plants to be grown for this contract, including inspection plants and replacement plants, has been received and accepted by the vendor. The statement from the vendor shall include the names, sizes, and quantities of plants ordered and the anticipated dates of delivery. The Contractor shall notify the Engineer, in writing, when the vendor has started to grow the plants.

Within 30 days after the contract has been approved, the Contractor shall furnish the Engineer a statement from the vendor that the order for the plants required for this contract, including inspection plants, has been received and accepted by the vendor. The statement from the vendor shall include the names, sizes, and quantities of plants ordered and the anticipated date of delivery.

The Contractor shall place orders for replacement plants with the vendor at the appropriate time so that the roots of the replacement plants are not in a root-bound condition.

Attention is directed to Section 9-1.06, "Partial Payments," of the Standard Specifications. For progress payment purposes, the Department will retain 50 percent of the estimated value of highway planting work done until a statement from the vendor that the order for the plants required for this contract has been submitted to the Engineer.

SECTION 10-2 ESTABLISH EXISTING PLANTING

This work shall consist of establishing existing planting.

Attention is directed to Sections 7-1.01, "Laws to Be Observed," 9-1.06, "Partial Payments," and 9-1.07, "Payment After Acceptance," of the Standard Specifications.

Attention is directed to "Order of Work" and "Cooperation" of these special provisions.

The Title Sheet shows the limits of work for this project. The other plan sheets are from the original Highway Planting contract, number 237024, and show the specific areas within which the work of establishing existing planting shall be performed under this project. The irrigation facilities and planting shown on the plans may differ from actual field locations and conditions. The Contractor's attention is directed to the first paragraph of Section 2-1.03, "Examination of Plans, Specifications, Contract, and Site of Work," of the Standard Specifications. No work will be required in the median areas.

MATERIALS

Mulch

Mulch shall be wood chips.

Commercial fertilizer (slow release) shall be a pelleted or granular form, shall be slow or controlled release with a nutrient release over an 8- to 12-month period, and shall fall within the following guaranteed chemical analysis range:

Ingredient	Percentage
Nitrogen	16
Phosphoric Acid	8
Water Soluble Potash	8

Commercial Fertilizer (Packets)

Commercial fertilizer (packet) shall be slow or controlled release and shall be in a biodegradable packet form. The packet shall gradually release nutrients over a 12-month period. Each packet shall have a mass of 10 g ± 1 g and shall have the following guaranteed chemical analysis:

Ingredient	Percentage
Nitrogen	20
Phosphoric Acid	10
Water Soluble Potash	5

Pesticides

Pesticides used to control weeds shall conform to the provisions in Section 20-4.026, "Pesticides," of the Standard Specifications. Except as otherwise provided in these special provisions, pesticide use shall be limited to the following materials:

Glyphosate formulated for aquatic applications.

If the Contractor elects to request the use of other pesticides on this project, the request shall be submitted, in writing, to the Engineer not less than 15 days prior to the intended use of the other pesticides. Except for the pesticides listed in these special provisions, no pesticides shall be used or applied without prior written approval of the Engineer.

Pesticides shall not be applied within the limits of the plant basins. Pesticides shall not be applied in a manner that allows the pesticides to come in contact with the foliage and woody parts of the plants.

10-2.01–SITE CLEAN UP AND INSPECTION Site clean up and inspection shall consist of removing weeds and invasive plants and controlling rodents and other pests, and removing trash and debris. Weeds shall be killed and removed within the entire project limits. Site clean up and inspection work shall be completed within 30 days after Contractor starts work on the contract. Removed plants and trash and debris shall be disposed of in conformance with the provisions of Section 7-1.13, "Disposal of Material Outside the Highway Right of Way," of the Standard Specifications.

The Contractor, in the presence of the Engineer, shall check for dead, missing, diseased, or unhealthy plants, for proper placement and adjustment of plant stakes and ties, and the condition of plant basins and depth of mulch in basins. A mulch deficiency in plant basins occurs when mulch is less than 50 mm in depth. A written list of existing plant deficiencies shall be submitted to the Engineer within 5 days after checking the existing facilities. The Engineer will have 5 days to review the deficiency lists.

10-2.02–INITIAL SITE WORK

Initial site work shall consist of correcting existing plant deficiencies, in conformance with plant deficiency list and as directed by the Engineer. Initial site work shall begin within 5 days from when the contractor receives the change order. Initial site work shall be complete within 20 days.

Initial site work shall begin after the Engineer's written approval of the initial site inspection. Initial site work shall be completed by the Contractor and will be paid for as extra work in conformance with the provisions of Section 4-1.03D, "Extra Work," of the Standard Specifications.

After completion of the initial site work, the Contractor shall be responsible for plant establishment. Plant establishment shall include, but not be limited to, watering, and fertilizing plants; pest control; plant basin repair, mulch replacement, and liter and trash removal

10-2.0 EXTENDED PLANT ESTABLISHMENT WORK

When plants have died or, in the opinion of the Engineer, have deteriorated to a point beyond which the plants will not mature as typical examples of their species the Contractor shall replace the plants when ordered by the Engineer within 10 working days at the Contractor's expense.

Replacement and planting of plants shall conform to the provisions in Section 20-4.05, "Planting," of the Standard Specifications and as shown on the original plans and as specified in these special provisions. The spacing requirements for replaced plants shall be as originally specified or installed.

The size of the replacement plants that were originally a pot, liner, No. 1, container size shall be No. 5 container for shrubs. Replacement plants for ground cover shall be the same size as originally planted as shown on the plans. Removed plants shall be disposed of in conformance with the provisions of Section 7-1.13, "Disposal of Material Outside the Highway Right of Way," of the Standard Specifications.

Plants that are readily available nursery stock shall be planted within 15 working days of the date of the Engineer's order.

Plants that are not readily available nursery stock shall be ordered by the Contractor within 7 days from the date of the Engineer's order. The Contractor shall furnish to the Engineer, within 7 days after ordering plants, a copy of the order to the vendors stating that the order has been received and accepted, and the date when the ordered plants will be shipped. Upon receiving the ordered plants, the plants shall be planted within 5 working days.

If the Contractor fails to replace plants that are readily available, or furnish the Engineer with a copy of the order and statement from the vendor, or plant plants as ordered within the times specified above, then the working days following any of those time periods will not be credited as working days. Crediting of working days will resume when plants have been replaced satisfactorily, as determined by the Engineer.

Soil amendment shall be applied at the rate as shown on the original plant list to replacement plants at the time of planting.

Plant basins shall be kept well formed. Silt shall be removed as often as necessary to provide sufficient containment of water for healthy plant growth.

Mulch shall be applied to a depth of 75 mm to existing mulched areas outside of plant basins when 70 percent of the contract is completed.

Plants shall have water applied as often as necessary to maintain healthy plant growth and shall be kept watered in conformance with the provisions in Section 20-4.06, "Watering," of the Standard Specifications. Excessive use of water resulting in runoff will not be allowed.

The Contractor shall make the arrangement for furnishing and applying water during establishing existing plants.Hours of watering may require adjusting normal working hours due to inadequate water supply and to prevent wind drift or overspray onto the traveled way.

Weeds shall be killed within planting areas and decomposed granite.

Weeds within plant basins, including basin shall be removed by hand pulling before they exceed 100 mm in length, and disposed of on the same day that they are pulled in conformance with the provisions in Section 7-1.13, "Disposal of Material Outside the Highway Right of Way," of the Standard Specifications.

Litter shall include trash in the trash cans and debris. Litter control and trash in the trash can_shall be performed a minimum of 2 times a month.

The Contractor shall be responsible for the removal of litter from within the limits of the project.

Litter shall be removed and disposed of in conformance with the provisions of Section 7-1.13, "Disposal of Material Outside the Highway Right of Way," of the Standard Specifications.

Additional litter removal and disposal when ordered by the Engineer will be paid for as extra work as provided in Section 4-1.03D, "Extra Work," of the Standard Specification.

When ordered by the Engineer, litter as a result of a highway accident shall be removed and disposed of by the Contractor in conformance with the provisions of Section 7-1.13, "Disposal of Material Outside the Highway Right of Way," of the Standard Specifications. Removal and disposal will be paid for as extra work in conformance with the provisions of Section 4-1.03D, "Extra Work," of the Standard Specification.

MEASUREMENT AND PAYMENT

Working days upon which no work will be required in performing establish existing planting and the Contractor is not present or working on the job site will be credited as working days, except when the Contractor fails to adequately perform work as specified in these special provisions.

The contract lump sum price paid for establish existing planting shall include full compensation for furnishing all labor, materials, tools, equipment, and incidentals, and for doing all the work involved in establish existing planting, complete in place, as shown on the plans, as specified in the Standard Specifications and these special provisions, and as directed by the Engineer.

LICENSED LANDSCAPE ARCHITECT REGISTERED SEAL PAGE

INCLUDED.

STATE OF CALIFORNIA ·DEPARTMENT OF TRANSPORTATION

SUBCONTRACTING PROVISIONS/LIST

Form ADM 1511 (REV. 2/99)

NAME	BUSINESS ADDRESS	DESCRIPTION OF PORTION OF WORK WHICH WILL BE DONE BY EACH CONTRACTOR*

*List each subcontractor in accordance with the "SUBCONTRACTING PROVISIONS" of this contract including any Disabled Veteran or Disadvantaged Business Enterpirse subcontractor:

* If none, bidder to write “NONE” in this space.

STATE OF CALIFORNIA·DEPARTMENT OF TRANSPORTATION

BID PROPOSAL FOR LUMP SUM BID

ADM 1508 (REV. 7/97)

APPROXIMATE MAGNITUDE OF WORK
$110.000.00

PROPOSAL TO STATE OF CALIFORNIA DEPARTMENT OF TRANSPORTATION

For: **Establish Existing Planting on State Highway in Solano County near Vallejo East of Sonoma Creek**

The undersigned, as bidder, declares that the only persons or parties interested in this proposal as principals are those named herein; that this proposal is made without collusion with any other person, firm or corporation; and the bidder has carefully examined the proposed form of contract and the plans therein referred, and proposes and agrees, if this proposal is accepted, that the bidder will contract with the State of California to provide all necessary labor, materials, tools, or equipment to do all of the work specified in the contract, in the time and manner therein prescribed, and that the bidder shall take in full payment therefor the following price:

LUMP SUM _____

1. If the bidder is awarded the contract and refuses to execute the contract forms presented to him for signature within the time and manner required, the bidder will be liable to the Department of Transportation for actual damages resulting to the Department therefrom or 10% of the amount bid, whichever is less. Should the bidder fail to pay these damages, Caltrans may list the bidder as in default and ineligible to bid future Caltrans projects.

2. The bid of any contractor who is currently in default with Caltrans on a contract already awarded may be regarded as nonresponsive and may be rejected. Default is defined as being within a period of liquidated damages on uncompleted work or under notice to begin or complete a contract where work has not commenced within the time limit set forth in that notice or was suspended without valid cause.

BUSINESS NAME (PRINT OR TYPE)	
BY (*MUST BE SIGNED BY AUTHORIZED PERSON*)	TITLE
BUSINESS ADDRESS (STREET/P.O. BOX, CITY, STATE)	ZIP
STATE CONTRACTOR'S LICENSE BOARD LICENSE NO.:	STATE CONTRACTOR'S LICENSE BOARD LICENSE CLASSIFICATION:

CALTRANS BIDDER -DVBE - INFORMATION

CO./RTE./K.P. _____
DISTRICT-CONTRACT NO. _____
BID AMOUNT $ _____
BID OPENING DATE _____
BIDDER'S NAME _____

DVBE PRIME CONTRACTOR
CERTIFICATION (1) _____

This information shall be submitted with your bid proposal on the date of bid opening.

DVBE GOAL FROM CONTRACT _____ %

CONTRACT ITEM NO.	Item of Work and Description of Work or services to be subcontracted or materials to be provided (2)	FOR CALTRANS USE ONLY	Name of DVBEs (DVBEs must be certified on the date bids are opened) (indicate Second and Lower Tier Subs)	DVBE Certification Number		Dollar Amount *** DVBE	Dollar Amount *** DVBE
Total Claimed Participation						$_ _ _ _ _ _ _ _ _ _ _ _	$_ _ _ _ _ _ _ _ _ _ _ _

IMPORTANT: Names of First Tier DVBE Subcontractors and their respective item(s) of work listed above shall be consistent, where applicable, with the names and items of work in the "List of Subcontracotrs"

submitted with bid pursuant to the Subcontractors Listing Law and Section 2-I.01 "General" of the Special Provisions. Identify Second and Lower Tier DVBE Subcontractors on this form.

1. DVBE prime contractors shall enter their OSBCE-DVBE reference number or the DVBE name as listed with OSMB. DBVE prime contractors will be credited with 100 percent of the contract price and need not complete the above table.

2. If 100 percent of the bid item is not performed or firnished by DVBEs, describe the exact portion, including the planned location of work to be performed, of item to be performed or furnished by DVBE.

Signature of Bidder

Date (Area Code) Tel. No.

Person to Contact (Please Type or Print)

DVBE INFORMATION
GOOD FAITH EFFORTS

All bidders shall submit the following information to demonstrate that a good faith effort to meet the DVBE goals has been made if their CALTRANS BIDDER - DVBE - INFORMATION form indicates that the DVBE goals will not be met.

Even if the bidders CALTRANS BIDDER - DVBE - INFORMATION form indicates the DVBE goals will be met, bidders should submit the following information to protect their eligibility for award of the contract. This is important because the submittal of only the CALTRANS BIDDER - DVBE - INFORMATION form will not normally provide sufficient information to demonstrate that a good faith effort was made. A bidder may not meet the DVBE goals after the submittal is analyzed by Caltrans for various reasons, e.g., if the subcontractor submitted by the bidder was not certified on the date bids were opened, or if the bidder made a mathematical error.

The following items are listed in Section 3-1.01A of the Special Provisions:

1. The awarding Department was contacted to identify DVBEs:
(Caltrans Business Enterprise Department - by phone or fax)

Person(s) Contacted	Dates of Contact

2. Other State and Federal agencies and local DVBE organizations that were contacted to identify DVBEs:
(See Office of Small Business Certification and Resources "Resource package" for information)

Agencies and Organizations and Persons Contacted	Dates of Contact

3. The names and dates of advertisement in trade papers and papers focusing on DVBEs:
(Enclose copies of advertisements)

Papers	Dates of Advertisement

4. The names of all potential DVBEs to whom invitations to bid were submitted:
(List names and attach copies of faxs, letters and any logs)

Names of DVBEs	Dates of Submittals

5. The names of all available DVBEs who were considered for this project:
(If you have exhaused all avenues to attain DVBE bid responses, and no responses were received, indicate "none" in this section)

Names of DVBEs Considered

NOTE: USE ADDITIONAL SHEETS OF PAPER IF NECESSARY. APPROPRIATE DOCUMENTATION SUCH AS COPIES OF NEWSPAPER ADS, LETTERS SOLICITING BIDS, AND TELEPHONE LOGS SHALL ACCOMPANY THIS FORM.

STATE OF CALIFORNIA

DEPARTMENT OF GENERAL SERVICES
OFFICE OF PROJECT MANAGEMENT AND DEVELOPMENT

SMALL BUSINESS PREFERENCE AND CERTIFICATION REQUEST

(For Construction Contractors Only)

CONTRACT NO. 04A2212

STD. 811 (REV. 6-2001)

READ BEFORE SIGNING

(THIS REQUEST MUST REMAIN WITH THE BID PACKAGE)

- 1. **PENALTY ASSESSMENT**
  A business will be assessed a penalty and be ineligible to transact any business with the Department for furnishing incorrect supporting information. (Title 2 of California Code of Regulations)

- 2. **PUBLIC WORKS AGREEMENTS EXCEEDING $100,000 AND REQUIRING TYPES "A OR "B" CONTRACTORS LICENSE.**
  On public works agreements where the lowest responsible bid exceeds $100,000, and the work to be performed requires a type "A" or "B" contractor's license and two or more subcontractors will be used, preferences will only be granted to those small business bidders who certify, under penalty of perjury, that at least fifty percent (50%) of subcontractors utilized on the job are certified small businesses. In meeting the 50% requirement, bidders may use certified small business and/or small businesses that have applied for certification no later than 5:00 p.m. on the bid opening date and are subsequently granted certification. The 50% small business subcontractor utilization shall be maintained through the term of the contract.

- 3. **JOINT BIDDERS/COMBINATION BIDDERS**
  Bidders bidding jointly or as a combination of several business organizations are especially cautioned that such bidders must be jointly licensed and approved in the form and style in which the bid is executed.

- 4. **NAME STYLE**
  The Small Business Preference and Certification Request must be signed in the same name style in which the bidder is licensed by the Contractor's State License Board.

BIDDER'(S') LEGAL NAME SYTLE	FEDERAL EMPLOYER IDENTIFICATION NUMBER
	OSBCR CERTIFICATION NUMBER

CERTIFICATION

- 5. The undersigned hereby requests preference as a "SMALL BUSINESS" and further certifies under penalty of perjury, that the firm still meets the requirements of Section 1896(L) Title 2 of California Code of Regulations. Acompleted form STD-813 meeting all applicable requirements must be on file in the Office of Small Business Certification and Resources (OSBCR) by 5:00 p.m. of the bid opening date. The form STD-813 may be obtained from the OSBCR Office at 707 Third Street, 1st Floor, Room 400, West Sacramento, CA 95605, or can be downloaded at *www.dgs.ca.gov/osbcr*.

BIDDER'S SIGNATURE	DATE SIGNED

- 6. **BIDDERS RECEIVING BONDING ASSISTANCE**
  In the event the bidder has received assistance in obtaining bonding for this project, he/she shall set forth the name and nature of the firm providing such assistance. Should the firm be listed as a subcontractor, bidder shall set forth the percentage of the contract to be performed by the subcontractor.

NAME OF FIRM PROVIDING BONDING ASSISTANCE

NATURE OF FIRM PROVIDING BONDING ASSISTANCE

SUBCONTRACTOR ASSISTANCE

☐ YES • Percentage _____ ☐ NO

PUBLIC CONTRACT CODE SECTION 10162 - QUESTIONNAIRE

In accordance with Public Contract Code Section 10162, the bidder shall complete, under penalty of perjury, the following questionnaire:

Has the bidder, any officer of the bidder, or any employee of the bidder who has a proprietary interest in the bidder, ever been disqualified, removed, or otherwise prevented from bidding on, or completing a federal, state or local government project because of a violation of law or safety regulation? If the answer is yes, attach an explanation.

☐ Yes ☐ No

PUBLIC CONTRACT CODE SECTION 10285.1 STATEMENT

In accordance with Public Contract Code Section 10285.1, bidder shall complete, under penalty of perjury, the following statement:

Has the bidder been convicted within the preceding three years of any offenses referred to in Public Contract Code Section 10285.1, including any charge of fraud, bribery, collusion, conspiracy, or any other act in violation of any state or federal antitrust law in connection with the bidding upon, award of or performance of, any public works contract, as defined in Public Contract Code Section 1101, with any public entity as defined in Public Contract Code Section 1100, including the Regents of the University of California or the Trustees of the California State University? The term "bidder" is understood to include any partner, member officer, director, responsible officer, or responsible managing employee thereof, as referred to in Section 10285.1.

☐ Yes ☐ No

NONCOLLUSION AFFIDAVIT

(Title 23 United States Code Section 112 and
Public Contract Code Section 7106)

In accordance with Title 23, United States Code, Section 112, and Public Contract Code 7106 if federally funded, or Public Contract Code 7106 if state funded, the bidder declares that the bid is not made in the interest of, or on behalf of, any undisclosed person, partnership, company, association, organization, or corporation; that the bid is genuine and not collusive or sham; that the bidder has not directly or indirectly induced or solicited any other bidder to put in a false or sham bid, and has not directly or indirectly colluded, conspired, connived, or agreed with any bidder or anyone else to put in a sham bid, or that anyone shall refrain from bidding; has not in any manner, directly or indirectly, sought by agreement, communication, or conference with anyone to fix the bid price of the bidder or any other bidder, or to fix any overhead, profit, or cost element of the bid price, or of that of any other bidder, or to secure any advantage against the public body awarding the contract of anyone interested in the proposed contract; that all statements contained in the bid are true; and, further, that the bidder has not, directly or indirectly, submitted his or her bid price or any breakdown thereof, or the contents thereof, or divulged information or data relative thereto, or paid, and will not pay, any fee to any corporation, partnership, company, association, organization, bid depository, or to any member or agent thereof to effectuate a collusive or sham bid.

Note: The above Noncollusion Affidavit is part of the Proposal. Signing this Proposal on the signature portion thereof shall also constitute signature of the Noncollusion Affidavit. Bidders are cautioned that making a false certification may subject the certifier to criminal prosecution.

IMPORTANT

CALIFORNIA COMPANY PREFERENCE

To be filled in and signed by all bidders.
Failure to fill out and sign this form may be cause for rejection of your bid.

The undersigned hereby states that he or she is or is not as designated below a "California company" in accordance with the provisions in the section entitled "California Company Preference" of the special provisions and Section 6107 of the Public Contract Code. (Check the appropriate box.)

☐ **I am a "California company".**

If "I am a 'California company' " was checked and you qualify as such by virtue of having your principal place of business in a state in which there is no local contractor preference on construction contracts indicate which state:

STATE OF

_____

If "I am a 'California company' " was checked and you qualify as such by virtue of having your principal place of business in a state in which there is a local contractor construction preference and you have paid not less than $5,000 in sales and use taxes to California for construction related activity for each of the five years immediately preceding the submission of the bid indicate your sales and use tax number:

CALIFORNIA SALES AND USE TAX NUMBER.

_____

☐ **I am not a "California company".**

If "I am not a 'California company' " was checked, indicate your state of residence, and the amount of preference given to local contractors in your state of residency on its public entity construction contracts.

STATE OF

_____

PERCENT

_____

Please explain if either percent or dollars is used to determine amount of preference.

WITH A MAXIMUM OF

$_____

I certify under penalty of perjury under the laws of the State of California that the foregoing is true and correct.

SIGNATURE OF BIDDER	DATE

CONTRACT NO. 04A2212

STATE OF CALIFORNIA·

DEPARTMENT OF TRANSPORTATION

BIDDER'S BOND

ADM-2010 (REV. 8/97)

We _____

_____

_____ as Principal, and

_____

_____

as Surety are bound unto the State of California, Department of Transportation, hereafter referred to as "Obligee", in the penal sum of ten percent (10%) of the total amount of the bid of the Principal submitted to the Obligee for the work described below, for the payment of which sum we bind ourselves, jointly and severally,

THE CONDITION OF THIS OBLIGATION IS SUCH, THAT:

WHEREAS, the Principal is submitting a bid to the Obligee, for _____

_____

(Copy here the exact description of work, including location, as it appears on the proposal)

for which bids are to be opened at _____

(Insert place where bids will be opened)

_____ on _____ .

(Insert date of bid opening)

NOW, THEREFORE, if the Principal is awarded the contract and, within the time and manner required under the specifications, after the prescribed forms are presented to him for signature, enters into a written contract, in the prescribed form, in accordance with the bid, and files two bonds with the Obligee, one to guarantee faithful performance of the contract and the other to guarantee payment for labor and materials as provided by law, then this obligation shall be null and void; otherwise, it shall remain in full force.

In the event suit is bought upon this bond by the Obligee and judgment is recovered, the Surety shall pay all costs incurred by the Obligee in such suit, including a reasonable attorney's fee to be fixed by the court.

Dated: _____ , 20 ___ .

Correspondence or claims relating to this bond should be sent to the surety at the following address:

_____

_____

_

_____

_

_____

Principal

_____

Surety

By _____

Attorney-in-Fact

CERTIFICATE OF ACKNOWLEDGMENT

State of California

County of _____ SS

On this _____ day of _____ in the year 20 before me, a notary public

in and for the county and state aforesaid, personally appeared _____,

Attorney-in-Fact

known to me to be the person whose name is subscribed to the within instrument and known to me to be the Attorney-in-Fact of_____,

and acknowledged to me that he (she) subscribed the name of the said company thereto as surety, and his (her) own name as Attorney-in-Fact.

(SEAL)

_____

Notary Public

CONTRACT NO. 04A2212

STATE OF CALIFORNIA· DEPARTMENT OF TRANSPORTATION

PAYMENT BOND

(Section 3247, Civil Code)
ADM-2009 (REV. 8/97)

Bond No. _____

WHEREAS, the State of California, Department of Transportation, hereafter referred to as "Obligee", has awarded to Contractor

_____ hereafter referred to as "Principal", a contract for the work described as follows:

AND, WHEREAS, said Principal is required to furnish a bond in connection with said contract, to secure the payment of claims of laborers, mechanics, material men and other persons as provided by law.

NOW, THEREFORE, we the undersigned Principal and Surety are bound unto the Obligee in the sum of

_____dollars

($_____) for which payment we bind ourselves, jointly and severally.

THE CONDITION OF THIS OBLIGATION IS SUCH,

That if said Principal or its subcontractors shall fail to pay any of the persons named in Civil Code Section 3181, or amounts due under the Unemployment Insurance Code with respect to work or labor performed by such claimant, or any amounts required to be deducted, withheld, and paid over to the Franchise Tax Board from the wages of employees of the Principal and his subcontractors pursuant to Section 18806 of the Revenue and Taxation Code, with respect to such work and labor, that the surety herein will pay for the same in an amount not exceeding the sum specified in this bond, otherwise the above obligation shall be void. In case suit is brought upon this bond, the surety will pay a reasonable attorney's fee to be fixed by the court.

This bond shall inure to the benefit of any of the persons named in Civil Code Section 3181 as to give a right of action to such persons or their assigns in any suit brought upon this bond.

Dated: _____, 20_____ .

Correspondence or claims relating to this bond should be sent to the surety at the following address:
_____
_____
_____
_____

_____

_____
Principal

_____
Surety

By _____
Attorney-in-Fact

NOTE: Signatures of those executing for the surety must be properly acknowledged.

CERTIFICATE OF ACKNOWLEDGMENT

State of California
County of _____ SS

On this_____ day of _____in the year 20 _____before me _____ , personally appeared _____ ,
Attorney-in-Fact
personally known to me (or proved to me on the basis of satisfactory evidence) to be the person whose name is subscribed to this instrument as the Attorney-in-Fact of _____, and acknowledged to me that he (she) subscribed the name of the said company thereto as surety, and his (her) own name as Attorney-in-Fact.

(SEAL)

_____
Notary Public

CONTRACT NO. 04A2212

STATE OF CALIFORNIA· DEPARTMENT OF TRANSPORTATION

PERFORMANCE BOND

(To Accompany Contract)
ADM-2008 (REV. 8/97)

KNOW ALL MEN BY THESE PRESENTS, Bond No. _____

THAT WHEREAS, The State of California, acting by and through the Department of Transportation, has awarded to

as principal, hereinafter designated as the "Contractor", a contract for the work described as follows:

AND WHEREAS, The Contractor is required to furnish a bond in connection with said contract guaranteeing the faithful performance thereof:

NOW THEREFORE, We the undersigned Contractor and surety are held and firmly bound unto the State of California, in the sum of_____Dollars($_____), to be paid to the said State or its certain attorney, its successors and assigns, for which payment, well and truly to be made, we bind ourselves, our heirs, executors and administrators, successors or assigns, jointly and severally, firmly by these presents.

THE CONDITION OF THIS OBLIGATION IS SUCH,

That if the above bound Contractor, his or its heirs, executors, administrators, successors or assigns, shall in all things stand to and abide by, and well and truly keep and perform the covenants, conditions and agreements in the foregoing contract and any alteration thereof made as therein provided, on his or their part to be kept and performed at the time and in the manner therein specified, and in all respects according to their true intent and meaning, and shall indemnify and save harmless the State of California, its officers and agents, as therein stipulated, then this obligation shall become and be null and void; otherwise, it shall be and remain in full force and virtue.

IN WITNESS WHEREOF, We have hereunto set our hands and seals on this_____ day of _____ , 20_____.

Correspondence or claims relating to this bond should be sent to the surety at the following address:
_____
_____
_____
_____
_

_____

_____
Principal

_____(SEAL)
Surety

By _____
Attorney-in-Fact

NOTE: Signatures of those executing for the surety must be properly acknowledged, and a Power of Attorney attached.

CERTIFICATE OF ACKNOWLEDGMENT

State of California
County of _____ SS

On this_____ day of _____in the year 20 _____before me, a notary public in and for the county and state aforesaid, personally appeared _____
_____.
Attorney-in-Fact
Known to me to be the person whose name is subscribed to the within instrument and known to me to be the Attorney-in-Fact of _____ and acknowledged to me that he subscribed the name of the said company thereto as surety, and his own name as Attorney-in-Fact.

(SEAL)

_____
Notary Public

STATE OF CALIFORNIA

CONTRACT NO. 04A2212

PAYEE DATA RECORD

(Required in lieu of IRS W-9 when doing business with the State of California)

STD. 204 (REV. 2-99)

NOTE: Governmental entities, federal, state, and local (including school districts) are not required to submit this form.

SECTION 1 must be completed by the requesting state agency before forwarding to the payee

1		
PLEASE RETURN TO:	DEPARTMENT/OFFICE **DEPARTMENT OF TRANSPORTATION, CONTRACTS OFFICE MS-67** STREET ADDRESS **1727 30TH STREET** CITY, STATE, ZIP CODE **SACRAMENTO, CA 95816-7006** TELEPHONE NUMBER **(916) 227-6000**	**PURPOSE**: Information contained in this form will be used by state agencies to prepare Information Returns (Form 1099) and for withholding on payments to nonresident payees. Prompt return of this fully completed form will prevent delays when processing payments. **(See Privacy Statement on reverse)**

2 PAYEE'S BUSINESS NAME

SOLE PROPRIETOR-ENTER OWNER'S FULL NAME HERE (Last, First, M.I.)

MAILING ADDRESS (Number and Street or P.O. Box Number)

(City, State, and Zip Code)

3 **PAYEE ENTITY TYPE**

CHECK ONE BOX ONLY

- ☐ **MEDICAL CORPORATION (including dentistry, podiatry, psychotherapy, optometry, chiropractic, etc.)**
- ☐ **PARTNERSHIP**
- ☐ **EXEMPT CORPORATION (Non-profit)**
- ☐ **ESTATE OR TRUST**
- ☐ **ALL OTHER CORPORATIONS**
- ☐ **INDIVIDUAL/SOLE PROPRIETOR**

NOTE: State and local governmental entities, including school districts are not required to submit this form.

4 **PAYEE'S TAXPAYER I.D.NUMBER**

SOCIAL SECURITY NUMBER REQUIRED FOR INDIVIDUAL/SOLE PROPRIETOR BY AUTHORITY OF THE REVENUE AND TAXATION CODE SECTION 18646 (See Reverse)

FEDERAL EMPLOYERS IDENTIFICATION NUMBER (FEIN) ☐☐ – ☐☐☐☐☐☐☐

IF PAYEE ENTITY TYPE IS A CORPORATION, PARTNERSHIP, ESTATE OR TRUST, ENTER FEIN.

SOCIAL SECURITY NUMBER ☐☐☐ – ☐☐ – ☐☐☐☐

IF PAYEE ENTITY TYPE IS INDIVIDUAL/SOLE PROPRIETOR, ENTER SSN.

NOTE: Payment will **not be processed without an accom-**panying taxpayer I.D. number.

5 **PAYEE RESIDENCY STATUS**

CHECK APPROPRIATE BOX(ES)

- ☐ California Resident - Qualified to do business in CA or a permanent place of business in CA
- ☐ Nonresident (See Reverse) Payments to nonresidents for services may be subject to state withholding
  - ☐ WAIVER OF STATE WITHHOLDING FROM FRANCHISE TAX BOARD ATTACHED
  - ☐ SERVICES PERFORMED OUTSIDE OF CALIFORNIA

NOTE:

a. An estate is a resident if decedent was a California resident at time of death.

b. A trust is a resident if at least one trustee is a California resident (See reverse)

6 **CERTIFYING SIGNATURE**

I hereby certify under penalty of perjury that the information provided on this document is true and correct. If my residency status should change, I will promptly inform you.

AUTHORIZED PAYEE REPRESENTATIVE'S NAME (Type or Print)	TITLE	
SIGNATURE	DATE	TELEPHONE NUMBER

STATE OF CALIFORNIA

PAYEE DATA RECORD

STD. 204 (REV. 2-99) (REVERSE)

ARE YOU A RESIDENT OR A NONRESIDENT?

Each corporation, individual/sole proprietor, partnership, estate or trust doing business with the State of California must indicate their residency status along with their taxpayer identification number.

A **corporation** will be considered a "resident" if it has a permanent place of business in California. The corporation has a permanent place of business in California if it is organized and existing under the laws of this state or, if a foreign corporation has qualified to transact intrastate business. A corporation that has not qualified to transact intrastate business (e.g., a corporation engaged exclusively in interstate commerce) will be considered as having a permanent place of business in this state only if it maintains a permanent office in this state that is permanently staffed by its employees.

For **individuals/sole proprietors**, the term "resident" includes every individual who is in California for other than a temporary or transitory purpose and any individual domiciled in California who is absent for a temporary or transitory purpose. Generally, an individual who comes to California for a purpose which will extend over a long or indefinite period will be considered a resident. However, an individual who comes to perform a particular contract of short duration will be considered a nonresident.

For withholding purposes, a **partnership** is considered a resident partnership if it has a permanent place of business in California. An **estate** is considered a California estate if the decedent was a California resident at the time of death and a **trust** is considered a California trust if at least one trustee is a California resident.

More information on residency status can be obtained by calling the Franchise Tax Board at the numbers listed below:

From within the United States, call.....1-800-852-5711
From outside the United States, call.....1-916-845-6500
For hearing impaired with TDD, call.....1-800-822-6268

ARE YOU SUBJECT TO NONRESIDENT WITHHOLDING?

Payments made to nonresident payees, including corporations, individuals, partnerships, estates and trusts, are subject to withholding. Nonresident payees performing services in California or receiving rent, lease or royalty payments from property (real or personal) located in California will have 7% of their total payments withheld for state income taxes. However, no withholding is required if total payments to the payee are $1,500 or less for the calendar year.

A nonresident payee may request that income taxes be withheld at a lower rate or waived by sending a completed form FTB 588 to the address below. A waiver will generally be granted when a payee has a history of filing California returns and making timely estimated payments. If the payee activity is carried on outside of California or partially outside of California, a waiver or reduced withholding rate may be granted. For more information, contact:

Franchise Tax Board
Nonresident Withholding Section
Attention: State Agency Withholding Coordinator
P.O. Box 651, Sacramento, CA 95812-0651
Telephone: (916) 845-4900
FAX: (916) 845-4831

If a reduced rate of withholding or waiver has been authorized by the Franchise Tax Board, attach a copy to this form.

PRIVACY STATEMENT

Section 7(b) of the Privacy Act of 1974 (Public Law 93-5791) requires that any federal, state, or local governmental agency which requests an individual to disclose his social security account number shall inform that individual whether that disclosure is mandatory or voluntary, by which statutory or other authority such number is solicited, and what uses will be made of it.

The State of California requires that all parties entering into business transactions that may lead to payment(s) from the State must provide their Taxpayer Identification Number (TIN) as required by Revenue and Taxation Code Section 18646, to facilitate tax compliance enforcement activities and to facilitate the preparation of Form 1099 and other information returns as required by Internal Revenue Code Section 6109(a). The TIN for individuals and sole proprietors is the Social Security Number (SSN).

It is mandatory to furnish the information requested. Federal law requires that payments for which the requested information is not provided be subject to a 31% withholding and State law imposes noncompliance penalties of up to $20,000.

You have the right to access records containing your personal information, such as your SSN. To exercise that right, please contact the business services unit or the accounts payable unit of the State agency(ies) with which you transact that business.

Please call the Department of Finance, Fiscal Systems and Consulting Unit at (916) 324-0385 if you have any questions regarding this Privacy Statement. Questions related to residency or withholding should be referred to the telephone numbers listed above. All other questions should be referred to the requesting agency listed in Section 1.

STATE OF CALIFORNIA-DEPARTMENT OF TRANSPORTATION

RECYCLE CONTENT CERTIFICATION

ADM 2038 (Rev 10/98)

California Public Contract Code Section 10354 requires contractors and bidders to identify the recycled content of each commodity (products, goods, material, supplies) provided to the State to satisfy the requirements of this contract. The contractor/bidder shall identify both the postconsumer and secondary material content of each commodity even if the commodity contains no recycled material or contains less than the minimum percentage specified in California Public Contract Code Sections 12161 and 12200 to be considered a "recycled product."

Contractor/Bidder Name	Address	
Telephone	FAX	Date
Printed Name of Person Completing Form	Title	Signature of Person Completing Form

Product Description(1)	Postconsumer Material Content (%)(2)	Secondary Material Content (%)(3)	Virgin Material Content (%)(4)	Total Material Content (%)(5)	Product Category(6)	Quantity (#)(7)	Unit of Measure (#)(8)	Dollar Amount ($)(9)
				100				
				100				
				100				
				100				
				100				
				100				
				100				

If the contract does not require any commodities to be provided, indicate N/A under "Product Description."

If the product(s) that you are providing do not contain any recycled content, indicate "100" under Virgin Material column.

The numbers in the postconsumer, secondary, and virgin material columns must add up to 100 percent.

Please see footnotes on Sheet 2 for additional instructions.

STATE OF CALIFORNIA-DEPARTMENT OF TRANSPORTATION

RECYCLE CONTENT CERTIFICATION

ADM 2038 (Rev 10/98)

FOOTNOTES

(1) Please identify the product being provided and a brief description of the product.

(2) Postconsumer material is defined as “a finished material which would have been disposed of as a solid waste, having completed its life cycle as a consumer item and does not include manufacturing wastes.” Examples of this material are any recyclables (paper, plastic, glass, motor oil, etc.) that are placed at the curb for collection or dropped off at a recycling center that are used to manufacture new products.

(3) Secondary material is defined as “fragments of finished products or finished products of a manufacturing process, which has converted a resource into a commodity of real economic value, but does not include excess virgin resources of the manufacturing process. Examples of secondary material include paper converting scrap that does not leave the manufacturing or converting facility, overruns or manufacturing waste that does not get out of a plant, or any other type of product or material that never gets to the end-user, but instead is mixed into the feedstock and used to manufacture new products.

NOTE: Secondary material DOES NOT include postconsumer material. FOR EXAMPLE, if a Fine Printing and Writing paper contained 20% postconsumer material, you would indicate 20 in the postconsumer colunm and 80 in the virgin column. If the product had 40% secondary material and 20% postconsumer material, you would indicate 40 in the secondary column, 20 in the postconsumer column, and 40 in the virgin column.

(4) Virgin material is the component of the product made from non-recycled material; that is, it is neither postconsumer nor secondary material.

(5) The addition of the virgin column, the postconsumer column, and the secondary column must equal 100 percent.

(6) Product category refers to one of eleven product categories identified in Public Contract Code 12205 for State agencies to obtain purchase goals. The product categories are fine printing and writing paper, paper products, plastic products, glass products, compost and co-compost, lubricating oil, paint, solvent, steel, tires, and tire-derived products. If the product does not fit into any of the product categories, put N/A.

Fine Printing and Writing Papers (FPWP) include all papers that are typically written on such as copy and xerographic paper, envelopes, tablets, notepads, notebooks, etc.

Paper products refer to all other non-writing papers products such as paper towel, tissue, boxes, file folders, publications.

If a product is made from multiple material types, please place the product in the product category of the material that comprises the majority (either by weight or volume) of the product.

(7) Please identify the quantity of the product(s) being provided.

(8) Please identify the unit of measure of the quantity of product(s) being provided.

(9) Please identify the dollar amount of the products being provided.

DIST	COUNTY	ROUTE	KILOMETER POST TOTAL PROJECT	SHEET NO	TOTAL SHEETS
04	Sol	37	0.3	1	4

INDEX OF SHEETS

Sheet No.	Description
1	Title and Location Map
2-3	Establish Existing Planting Plans
4	Construction Details

THE STANDARD PLANS LIST APPLICABLE TO THIS CONTRACT IS INCLUDED IN THE NOTICE TO CONTRACTORS AND SPECIAL PROVISIONS BOOK.

STATE OF CALIFORNIA

DEPARTMENT OF TRANSPORTATION

PROJECT PLANS FOR ESTABLISH EXISTING PLANTING ON STATE HIGHWAY IN SOLANO COUNTY NEAR VALLEJO EAST OF SONOMA CREEK

To be supplemented by Standard Plans dated July, 1999

The State of California or its officers or agents shall not be responsible for the accuracy or completeness of electronic copies of this plan sheet.

Caltrans now has a web site! To get to the web site, go to: http://www.dot.ca.gov

Caltrans Metric

LOCATION OF CONSTRUCTION

KP 0.3
PM 0.2

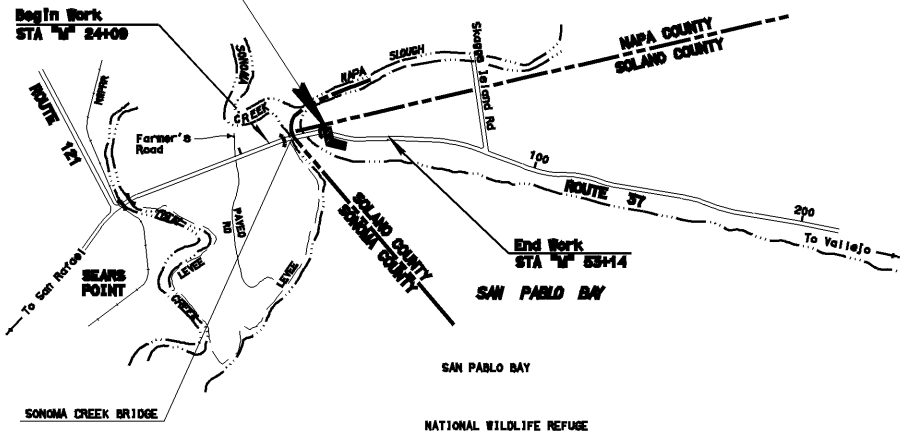

NO SCALE

Jeanne Gorham
Licensed Landscape Architect

September 10, 2004
Plans Approval Date

LICENSED LANDSCAPE ARCHITECT
JEANNE A. GORHAM
12-31-04
REGISTRATION EXPIRES
9-10-04
DATE
STATE OF CALIFORNIA

The Contractor shall possess the Class (or classes) of license as specified in the "Notice to Contractors" .

PROJECT LANDSCAPE ARCHITECT	DATE	DESIGN LANDSCAPE ARCHITECT	DATE	APPROVAL RECOMMENDED BY:
JEANNE GORHAM	9/04	FELIX ONULUBUGHA	9/04	

Contract No. 04-1L5704

FOR REDUCED PLANS ORIGINAL SCALE IS IN MILLIMETERS 0 20 40 60 80

USERNAME => fonulwug
DGN FILE => 4115701a01.dgn

CU 04344

EA 1L5701

DATE PLOTTED => 14-SEP-2004 15:18

00-00-00

MAX — maximum
PAC — Packets

PLANT LIST AND PLANTING SPECIFICATIONS

PLANT GROUP	PLANT No	SYMBOL	BOTANICAL NAME	COMMON NAME	SIZE	QUANTITY EACH	HOLE SIZE (mm) DIA	HOLE SIZE (mm) DEPTH	BASIN TYPE	IRON SULFATE ○	SOIL AMEND ①	COMMERCIAL FERTILIZER ① PLANTING	COMMERCIAL FERTILIZER ① PLT ESTB	BASIN MULCH	STAKING	PLANTING LIMITS MINIMUM DISTANCE (m) FROM TRVD WAY	PVMT	FENCE	WALL	PAVED DITCH	EARTH DITCH	ON CENTER (m)	REMARKS
A	1		CEANOTHUS GRISEUS 'BLUE JEANS'	--	No. 1	20	②	②	1	--	0.03 m3	1 PAC	--	0.03 m3	--	--	3	3	3	3	3	④	SHRUB
	2		ROSA CALIFORNICA	CALIFORNIA WILD ROSE	No. 1	18	②	②	1	--	0.03 m3	1 PAC	--	0.03 m3	--	--	2	2	2	2	2	④	SHRUB
	3		BACCHARIS PILULARIS	COYOTE BUSH	No. 1	1753	450	450	1	--	0.03 m3	1 PAC	--	0.03 m3	--	--	2	2	2	2	2	④	SHRUB
I	4		DISTICHLIS SPICATA	SALT GRASS	POT ⑧	200	②	②	--	--	--	--	--	--	--	--	--	--	--	--	--	⑥	GRASS
	5		FRANKINA SALINA	ALKALI HEATH	POT ⑧	200	②	②	--	--	--	--	--	--	--	--	--	--	--	--	--	⑥	FORB
	6		HORDEUM BRACHYANTHERUM 'SALT'	CALIFORNIA MEADOW BARLEY	POT ⑧	802	②	②	--	--	--	--	--	--	--	--	--	--	--	--	--	⑥	GRASS
	7		SALICORNIA VIRGINICA	PICKLEWEED	POT ⑧	802	②	②	--	--	--	--	--	--	--	--	--	--	--	--	--	⑥	FORB

APPLICABLE WHEN CIRCLED:

① - Quantities shown are "per plant" unless shown as m² application rates.
② - Sufficient to receive root ball.
3 - Does not apply to mulch areas.
④ - As shown on plans.
5 - Unless otherwise shown on plans.
⑥ - See detail.
7 - See Special Provisions.
⑧ - 40 mm diameter X 210 mm

LEGEND

REVEGETATION AREA
MULCH AREA
FIBER ROLL

NOTE:
Underlined portions of botanical name indicate abbreviations used on Planting Plans.

ESTABLISH EXISTING PLANTING

NO SCALE

~~PLANT LIST~~

EP-1 ~~HP-1~~

REVISED BY	DATE REVISED
FO	DATE 12/02
CALCULATED/DESIGNED BY JG	CHECKED BY 12/02

PROJECT LANDSCAPE ARCHITECT JEANNE GORHAM

STATE OF CALIFORNIA - DEPARTMENT OF TRANSPORTATION
Caltrans LANDSCAPE ARCHITECTURE

LAST REVISION 06-24-04
DATE PLOTTED => 14-SEP-2004
TIME PLOTTED => 15:21

FOR REDUCED PLANS ORIGINAL SCALE IS IN MILLIMETERS 0 20 40 60 80
USERNAME => fonukwug
DGN FILE => 41L5701fe1.dgn
CU 04344
EA 1L5701 ~~237021~~

DIST	COUNTY	ROUTE	KILOMETER POST TOTAL PROJECT	SHEET No	TOTAL SHEETS
04	SOL	37	0.3	3	4

Caltrans Metric

To Accompany Plans Dated 9-10-04

The State of California or its officers or agents shall not be responsible for the accuracy or completeness of electronic copies of this plan sheet.

For complete R/W and accurate access data, see R/W record maps at district office.

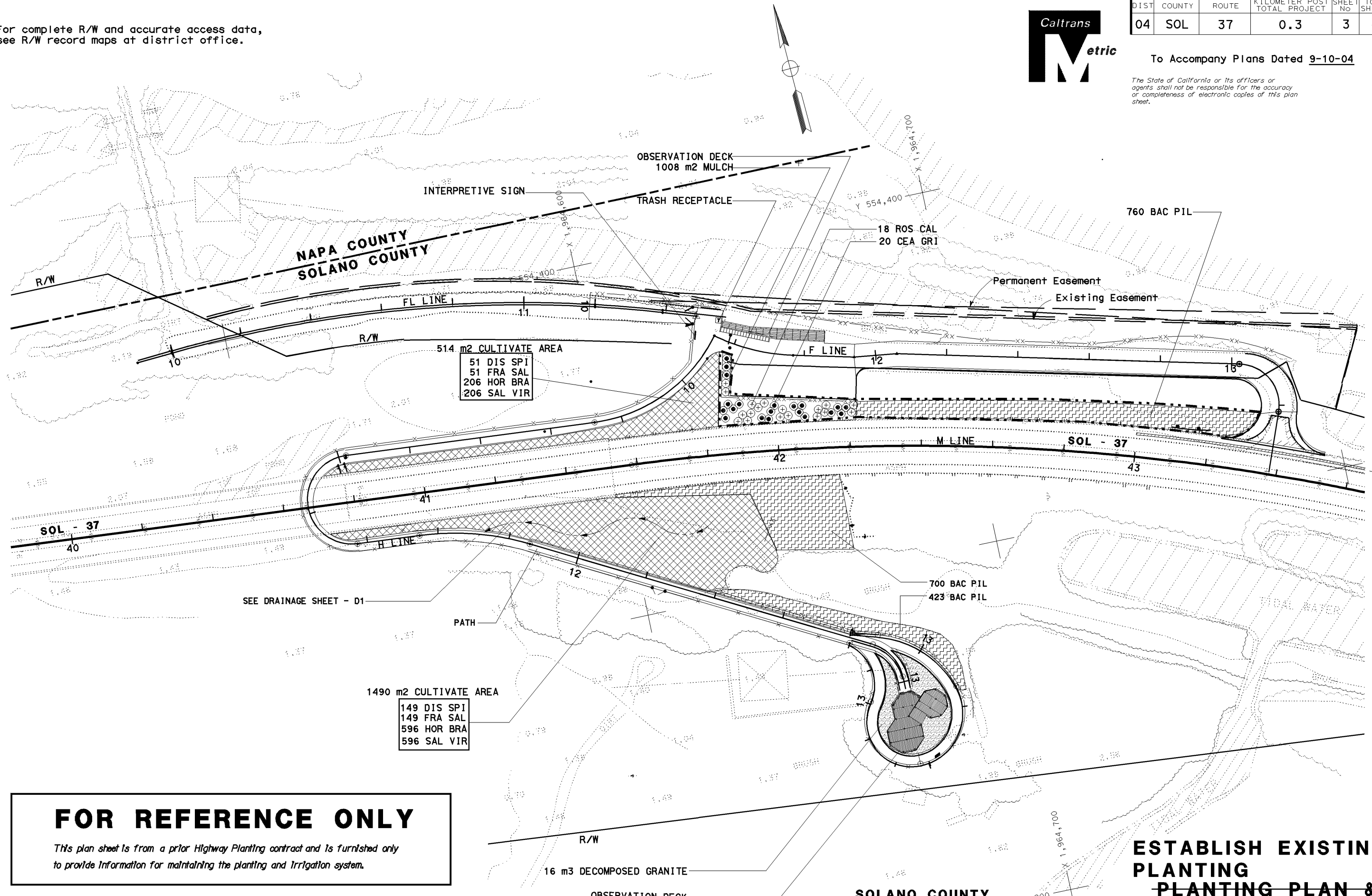

FOR REFERENCE ONLY

This plan sheet is from a prior Highway Planting contract and is furnished only to provide information for maintaining the planting and irrigation system.

ESTABLISH EXISTING PLANTING

~~PLANTING PLAN & EROSION CONTROL~~

SCALE = 1:500 **EP-2** ~~HP-2~~

REVISED BY	DATE REVISED

CALCULATED/DESIGNED BY	FO	DATE 12/02
CHECKED BY	JG	12/02

PROJECT LANDSCAPE ARCHITECT: JEANNE GORHAM

STATE OF CALIFORNIA - DEPARTMENT OF TRANSPORTATION
Caltrans LANDSCAPE ARCHITECTURE

LAST REVISION 06-24-04 | DATE PLOTTED => 14-SEP-2004 | TIME PLOTTED => 15:41

FOR REDUCED PLANS ORIGINAL SCALE IS IN MILLIMETERS 0 20 40 60 80

USERNAME => rclark
DGN FILE => 41L5701ti1.dgn

CU 04344

EA 1L5701 ~~237021~~

DIST	COUNTY	ROUTE	KILOMETER POST TOTAL PROJECT	SHEET No	TOTAL SHEETS
04	SOL	37	0.3	4	4

Caltrans Metric

To Accompany Plans Dated 9-10-04

The State of California or its officers or agents shall not be responsible for the accuracy or completeness of electronic copies of this plan sheet.

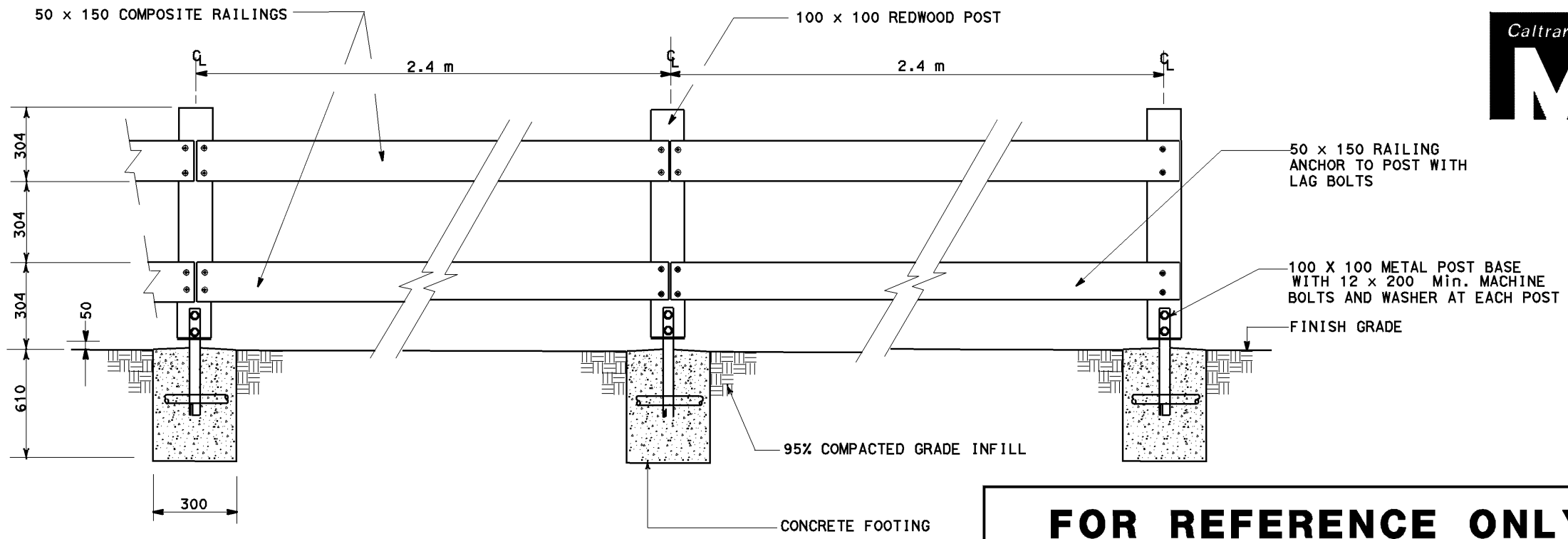

SECTION

COMPOSITE RAIL AND POST FENCE

FOR REFERENCE ONLY

This plan sheet is from a prior Highway Planting contract and is furnished only to provide information for maintaining the planting and irrigation system.

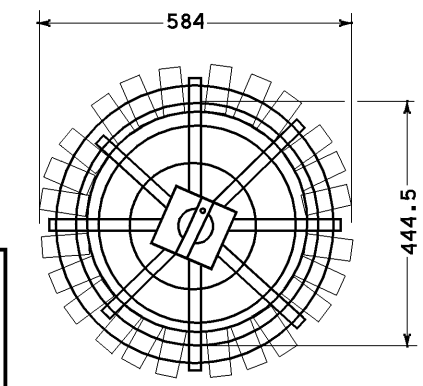

BOTTOM VIEW

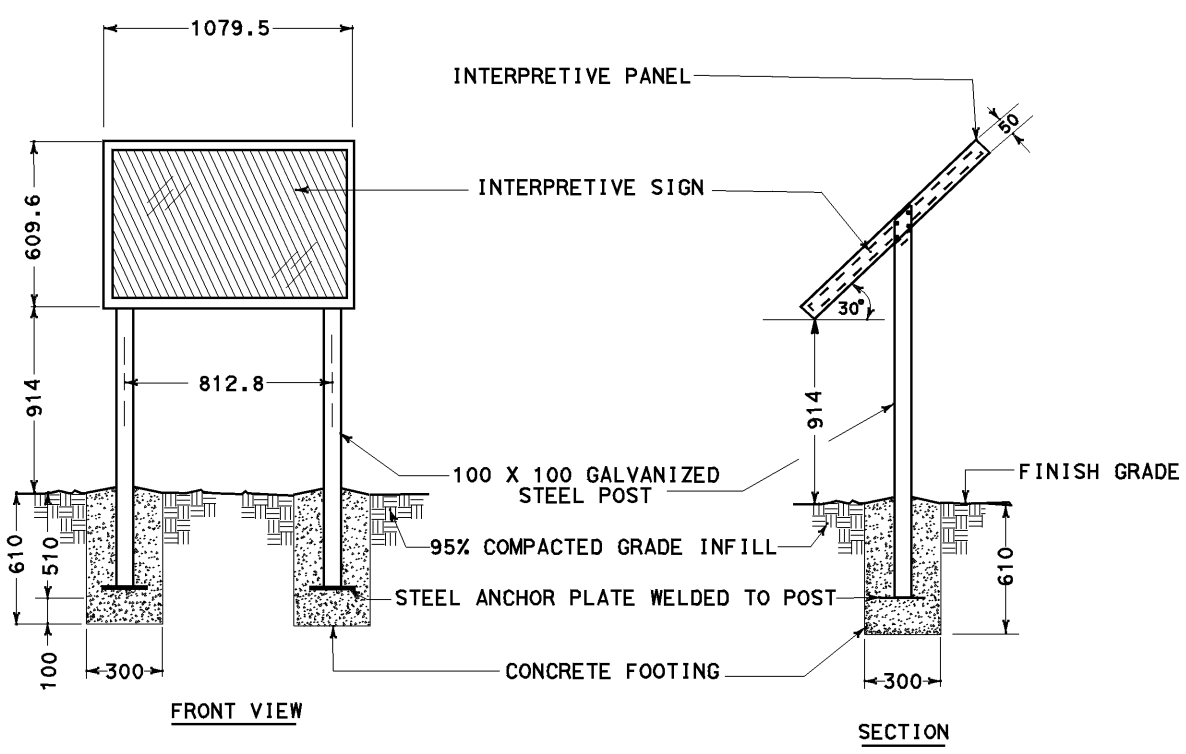

FRONT VIEW

SECTION

INTERPRETIVE SIGN

(NOTE: INTERPRETIVE SIGN SHALL BE STATE FURNISED)

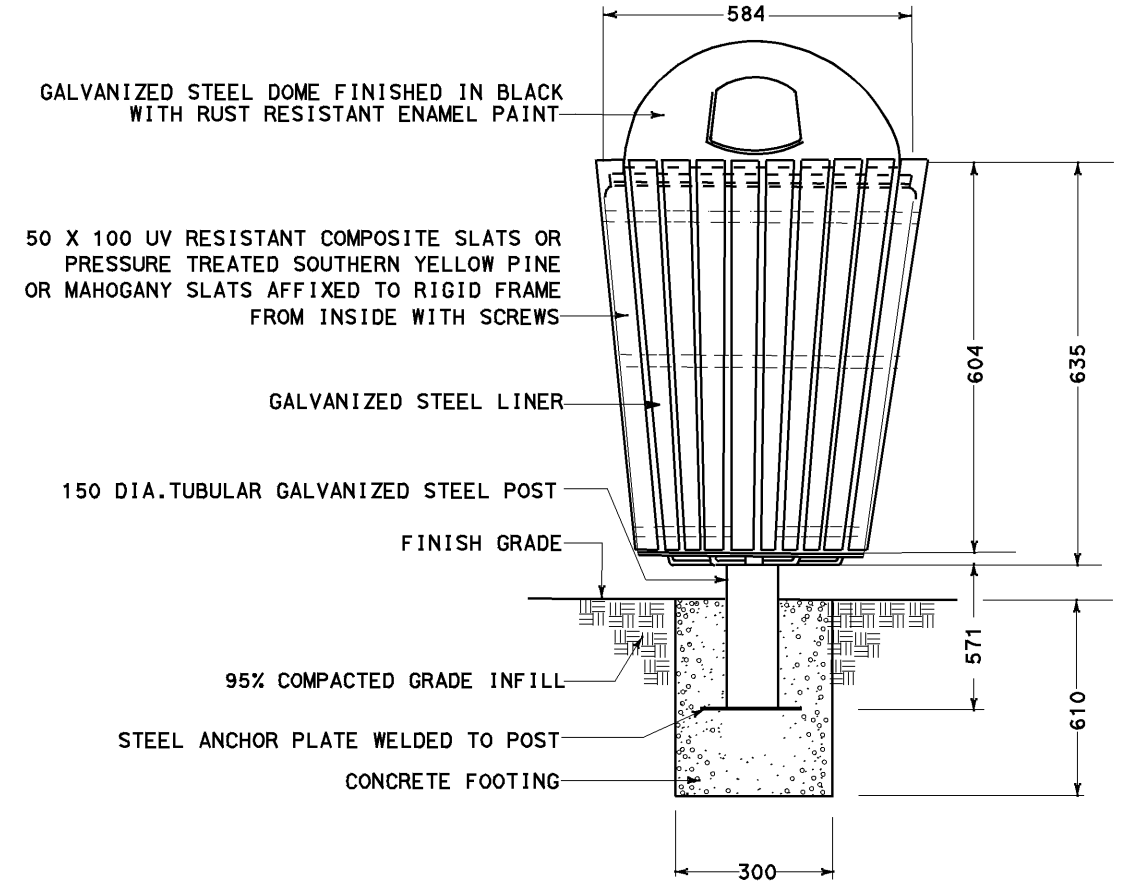

SECTION

TRASH RECEPTACLE

(IN-GROUND)

ALL DIMENSIONS ARE IN MILLIMETERS UNLESS OTHERWISE SHOWN.

ESTABLISH EXISTING PLANTING

DETAILS
EP-3
~~HP-4~~

NO SCALE

REVISED BY	DATE REVISED

CALCULATED/DESIGNED BY	FO	DATE 12/02
CHECKED BY	JG	12/02

PROJECT LANDSCAPE ARCHITECT: JEANNE GORHAM

STATE OF CALIFORNIA - DEPARTMENT OF TRANSPORTATION
Caltrans LANDSCAPE ARCHITECTURE

LAST REVISION 03-28-03

DATE PLOTTED => 14-SEP-2004
TIME PLOTTED => 15:42

FOR REDUCED PLANS ORIGINAL SCALE IS IN MILLIMETERS 0 20 40 60 80

USERNAME => rclark
DGN FILE => 41L5701tn1.dgn

CU 04344

EA ~~237021~~ 1L5701